THE OUTLAW 1/10 Scale Sprint Car by CustomWorks

DRIVER: Nick Rank
DATE: 7-12-2014
EVENT: 7th Annual Chezwik Memorial
CLASS: Stock Sprint
TRACK: CRC Hobbies LENGTH:

☑Clay ☑Hard Packed ☐Loose Dirt
☐Carpet ☐Asphalt ☐Concrete
☑Flat ☐Banked ☐True Oval ☐Tri-Oval
Traction: ☑High ☑Medium ☐Low

FRONT SUSPENSION

LEFT

CAMBER: 2
CAMBER LINK LOCATION ☐OUTER ☑INNER
CAMBER RATE SHIMS: .170

TOE IN/OUT 0
RF ☐LEAD ☐TRAIL AMOUNT:
SWAY BAR: ☐NONE ☑.063 ☐.078"

RIGHT

CAMBER: -1
CAMBER LINK LOCATION ☐OUTER ☑INNER
CAMBER RATE SHIMS: 0

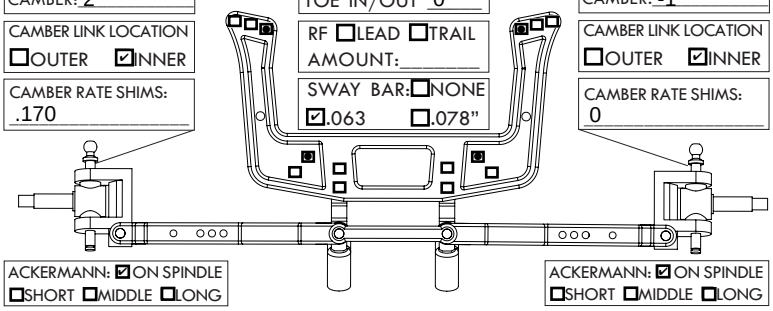

ACKERMANN: ☑ON SPINDLE ☐SHORT ☐MIDDLE ☐LONG

FRONT AXLE: ☐STOCK ☐EXTENDED
CASTOR: ☐0° ☐+5° ☐-5° ☑+10° ☐-10°

KICK-UP: ☑25° ☐20° HIGH ☐20° LO ☐15° HIGH ☐15° LO

CASTOR: ☐0° ☐+5° ☐-5° ☑+10° ☐-10°
FRONT AXLE: ☐STOCK ☐EXTENDED

AXLE SHIMS: Stk

ACKERMANN: ☑ON SPINDLE ☐SHORT ☐MIDDLE ☐LONG

AXLE SHIMS: Stk

REAR SUSPENSION

LEFT

CAMBER LINK LOCATION ☐OUTER ☐INNER

RIGHT

CAMBER LINK LOCATION ☐INNER ☐OUTER

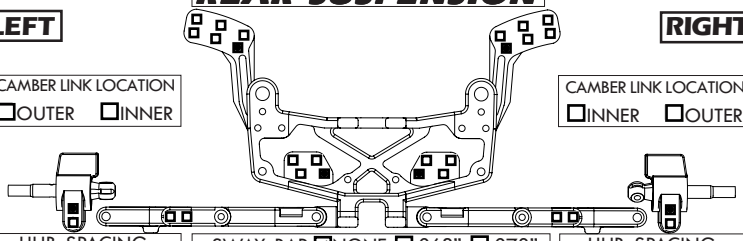

HUB SPACING: F☐☐☐☐☐☐☐R
CAMBER: -1
TOE-IN: 5
WHEEL SPACERS: Med

SWAY BAR: ☑NONE ☐.063" ☐.078"
REAR WIDTH
LR: stock RR: stock
TOE-BLOCK SHIMS:
LR: 0 RR: 0
ANTI-SQUAT SHIMS:
LR: 1.5 RR: 1.5

HUB SPACING: F☐☐☐☐☐☐☐R
CAMBER: 2
TOE-IN: -2
WHEEL SPACERS: Med

-SHADE IN MOUNTING LOCATIONS ON SUSPENSION ARMS, BEARING CARRIER AND SHOCK TOWER.

TIRES & TRACTION

TIRE TYPE: ☐FOAM ☑STREET RUBBER ☐LOOSE DIRT

-SHADE IN AREAS OF TRACTION ADDITIVE AND DRAW IN TIRE GROOVES

	COMPOUND	DIAMETER	INSERT
RF:	Barcode Gold- Spec	Stk	Full R
LF:	Barcode Gold- Spec		Stock
RR:	Barcode Gold- Spec		Pro Blu
LR:	Barcode Gold- Spec		Stock

LF RF LR RR

TRACTION ADDITIVE: We all run J Concept Barcode Gold Tires as a "Spec" Class. Inserts can be changed I put a full rear insert in the right front and Proline Blue in the Right Rear-- Used Joel Johnson tire additive

SHOCKS

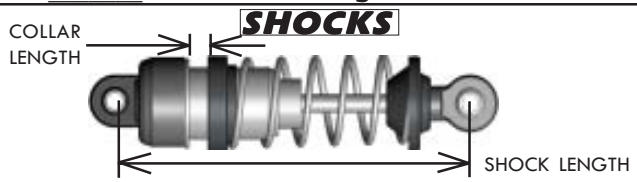

LEFT FRONT SHOCK
BODY LENGTH ☐SHORT ☐MED ☐LONG
SHAFT LENGTH ☐SHORT ☐MED ☐LONG
SPRING: White
OIL: 40 PISTON: Med
BLADDER: Black
LENGTH: 2.9
COLLAR: .5

RIGHT FRONT SHOCK
BODY LENGTH ☐SHORT ☐MED ☐LONG
SHAFT LENGTH ☐SHORT ☐MED ☐LONG
SPRING: Blue
OIL: 40 PISTON: Med
BLADDER: Black
LENGTH: 2.9
COLLAR: .15

LEFT REAR SHOCK
BODY LENGTH ☐SHORT ☐MED ☐LONG
SHAFT LENGTH ☐SHORT ☐MED ☐LONG
SPRING: Yellow
OIL: 40 PISTON: Med
BLADDER: Black
LENGTH: 3
COLLAR: .265

RIGHT REAR SHOCK
BODY LENGTH ☐SHORT ☐MED ☐LONG
SHAFT LENGTH ☐SHORT ☐MED ☐LONG
SPRING: Red
OIL: 40 PISTON: Med
BLADDER: Black
LENGTH: 3.20
COLLAR: .370

WEIGHT & CHASSIS HEIGHTS

ADDED LEAD:
FRONT 0
MIDDLE 0
REAR 0

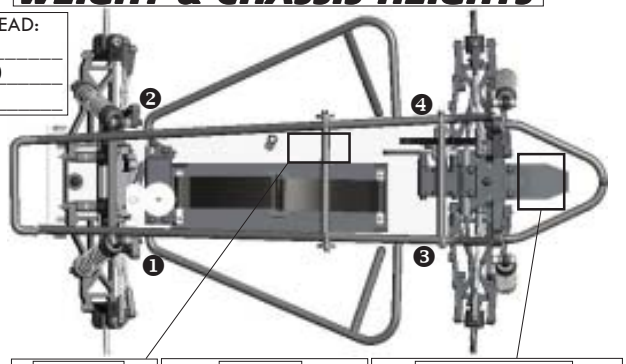

RECIEVER ☐AS SHOWN ☐ _____
BATTERY ☐FLAT ON CHASSIS ☐STOOD ON SIDE
SPEED CONTROL ☐AS SHOWN ☐ _____

CORNER WEIGHTS:
LF: 425 RF: 254
LR: 482 RR: 592

OVERALL WEIGHT: 1706

CHASSIS HEIGHTS BY LOCATION:
❶ .78 ❷ .78
❸ .74 ❹ .73
MEASURED FROM:
☐TOP OF CHASSIS
☐BOTTOM OF CHASSIS

WING

MAIN WING SIZE: ☐6X6 ☑7X7
FRONT WING SIZE: Small
SPOILER LENGTH: Legal
WING LOCATION:

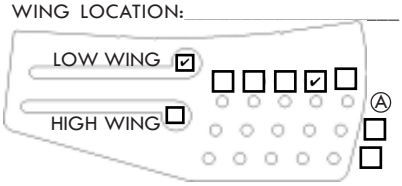

HOOD TYPE: CW Gen 6

MISC...

BATTERY TYPE: ☐LIPO ☐NiMH
MOTOR: 13.5 D-3
PINION: 31 SPUR: 81
SPEED CONTROL: LRP
PUNCH SETTING: Stock
INTIAL BRAKE: Stock
AUTO BRAKE: Stock

Missed track record by 1/100th in Round 2. Close Racing!
*** Kick up is 35 degrees
*** For the main I think the car would have liked the thicker front roll bar.
***Weights are in Grams
***Love this track. Is one of the best in the country. Put this race on your "to do " list. See you next year!!