DRIVER:_____
DATE:_____
EVENT_____
CLASS:_____
TRACK:_____ LENGTH:_____

☐Clay ☐Hard Packed ☐Loose Dirt
☐Carpet ☐Asphalt ☐Concrete
☐Flat ☐Banked ☐True Oval ☐Tri-Oval
Traction: ☐High ☐Medium ☐Low

FRONT SUSPENSION

LEFT

CAMBER:_____
CAMBER LINK LOCATION
☐OUTER ☐INNER
CAMBER RATE SHIMS:
_____

RIGHT

CAMBER:_____
CAMBER LINK LOCATION
☐OUTER ☐INNER
CAMBER RATE SHIMS:
_____

TOE IN/OUT _____
RF ☐LEAD ☐TRAIL
AMOUNT:_____
SWAY BAR: ☐NONE
☐.063 ☐.078"

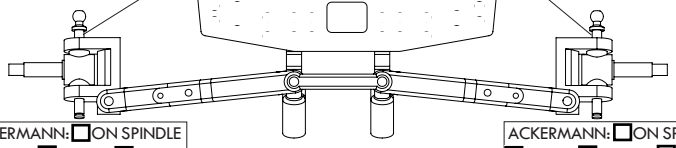

ACKERMANN: ☐ON SPINDLE
☐SHORT ☐MIDDLE ☐LONG

FRONT AXLE:
☐STOCK
☐EXTENDED

CASTOR: ☐0°
☐+5° ☐-5°
☐+10° ☐-10°

KICK-UP: ☐25°
☐20° HIGH ☐20° LO
☐15° HIGH ☐15° LO

CASTOR: ☐0°
☐+5° ☐-5°
☐+10° ☐-10°

FRONT AXLE:
☐STOCK
☐EXTENDED

AXLE SHIMS: _____

ACKERMANN: ☐ON SPINDLE
☐SHORT ☐MIDDLE ☐LONG

AXLE SHIMS: _____

REAR SUSPENSION

LEFT

CAMBER LINK LOCATION
☐OUTER ☐INNER

RIGHT

CAMBER LINK LOCATION
☐INNER ☐OUTER

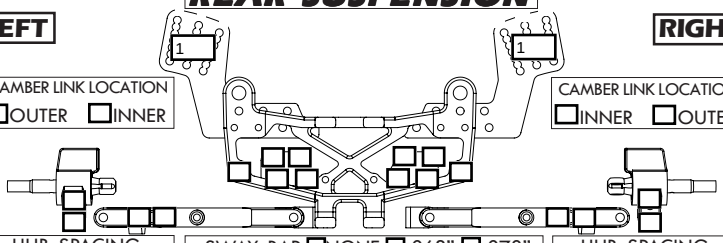

HUB SPACING:
F☐☐☐☐☐☐☐R

CAMBER:_____
TOE-IN: _____

WHEEL SPACERS:
_____

SWAY BAR: ☐NONE ☐.063" ☐.078"
REAR WIDTH (INNER/OUTER)
LR:_____RR:_____
TOE-BLOCK SHIMS:
LR:_____RR:_____
ANTI-SQUAT SHIMS:
LR:_____RR:_____

HUB SPACING:
F☐☐☐☐☐☐☐R

CAMBER:_____
TOE-IN: _____

WHEEL SPACERS:
_____

-SHADE IN MOUNTING LOCATIONS ON SUSPENSION ARMS, BEARING CARRIER AND SHOCK TOWER.

TIRES & TRACTION

TIRE TYPE: ☐FOAM ☐STREET RUBBER ☐LOOSE DIRT

	COMPOUND	DIAMETER	INSERT
RF:	_____	_____	_____
LF:	_____	_____	_____
RR:	_____	_____	_____
LR:	_____	_____	_____

TRACTION ADDITIVE:_____
_____
_____
_____

-SHADE IN AREAS OF TRACTION ADDITIVE AND DRAW IN TIRE GROOVES

LF RF

LR RR

SHOCKS

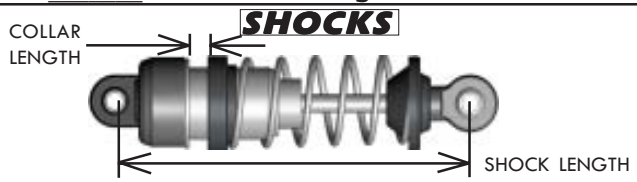

LEFT FRONT SHOCK
BODY LENGTH
☐SHORT ☐MED ☐LONG
SHAFT LENGTH
☐SHORT ☐MED ☐LONG
SPRING:_____
OIL:_____ PISTON:_____
BLADDER:_____
LENGTH:_____
COLLAR:_____

RIGHT FRONT SHOCK
BODY LENGTH
☐SHORT ☐MED ☐LONG
SHAFT LENGTH
☐SHORT ☐MED ☐LONG
SPRING:_____
OIL:_____ PISTON:_____
BLADDER:_____
LENGTH:_____
COLLAR:_____

LEFT REAR SHOCK
BODY LENGTH
☐SHORT ☐MED ☐LONG
SHAFT LENGTH
☐SHORT ☐MED ☐LONG
SPRING:_____
OIL:_____ PISTON:_____
BLADDER:_____
LENGTH:_____
COLLAR:_____

RIGHT REAR SHOCK
BODY LENGTH
☐SHORT ☐MED ☐LONG
SHAFT LENGTH
☐SHORT ☐MED ☐LONG
SPRING:_____
OIL:_____ PISTON:_____
BLADDER:_____
LENGTH:_____
COLLAR:_____

WEIGHT & CHASSIS HEIGHTS

ADDED LEAD:
FRONT_____
MIDDLE_____
REAR_____

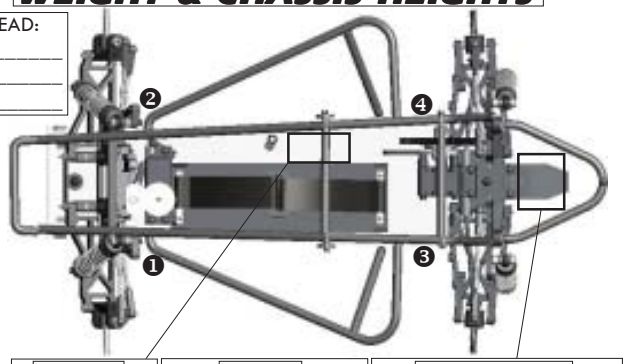

RECIEVER
☐AS SHOWN
☐ _____

BATTERY
☐FLAT ON CHASSIS
☐STOOD ON SIDE

SPEED CONTROL
☐AS SHOWN
☐ _____

CORNER WEIGHTS:
LF:_____ RF:_____
LR:_____ RR:_____

OVERALL WEIGHT: _____

CHASSIS HEIGHTS BY LOCATION:
❶_____ ❷_____
❸_____ ❹_____
MEASURED FROM:
☐TOP OF CHASSIS
☐BOTTOM OF CHASSIS

WING

MAIN WING SIZE: ☐6X6 ☐7X7
FRONT WING SIZE:_____
SPOILER LENGTH:_____
WING LOCATION:_____

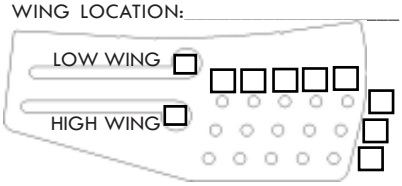

HOOD TYPE:_____

MISC...

BATTERY TYPE: ☐LIPO ☐NiMH
MOTOR: _____
PINION:_____ SPUR:_____
SPEED CONTROL:_____
PUNCH SETTING:_____
INTIAL BRAKE:_____
AUTO BRAKE:_____
_____
_____
_____
_____

_____
_____
_____
_____
_____
_____
_____
_____
_____
_____