OUTLAW 5.1 SPRINT CAR

INSTRUCTIONS



#0727 Outlaw 5.1 Racing Kit

CUSTOM WORKS RC CARS

Manufactured by:
Custom Works RC Products
760-B Crosspoint Drive
Denver, NC 28037
www.customworksrc.com

V111226

Thank you for purchasing the Outlaw 5.1 Sprint Car! The Outlaw sprint car platform has been developed for loose dirt buggy tire racing. In this kit you will find the newest generation of the car which features a variable offset chassis, newly designed shock towers, V2 rear camber mount, V2 battery mounts, V2 top shaft, Tri-Mount spur hub, and Vortex Wings.

This kit includes most of the parts required for the build. The following additional equipment must be added to complete the car. (Be sure to check if the track(s) you plan on racing at has any motor, battery or speed control restrictions.)

- Surface transmitter and receiver (minimum 2 channel)
- 1/10th scale electronic speed control
- 540 size brushless motor
- Pinion gear (48 pitch, appropriate size for motor)
- 2S (7.4v) hard case "shorty" LiPo battery
- Low profile steering servo
- Front and rear wheels & tires (2.2" diameter Team Associated style hex wheels)
- Silicone shock oil (35wt weight recommended)

Tools
The following tools are provided in the kit and will get you started. We suggest that you purchase higher quality tools for future maintenance.

•.050" Allen key •1.3mm Allen key •1.5mm Allen key •1/16" Allen key •2mm Allen key •Turnbuckle & 3/16" wrench

Additional tools
These tools are recommended for the build and may be required to complete.

•Curved scissors •Needle nose pliers •Hobby knife •Blue thread-lock •Sandpaper •5.5mm nut driver •7mm nut driver

Building tips
Parts are made with tight tolerance and held to the side of a "snug" fit as wear is expected over time. Try as we may, occasionally a burr may remain in/on a part and fit more tightly than desired. It is ok to use 400 Grit Sandpaper or a .125" drill to SLOWLY relieve a part from time to time. Suspension components should always pivot and swivel freely but without too much slop.

A lite to medium strength (usually the blue variety) thread locking fluid is suggested for all parts where metal screws thread into other metal parts. This will keep the screws from vibrating loose during operation and still allow the screw to be removed if needed. Remember it only takes a very small amount of thread-lock to secure the screw.

Do NOT use power screwdrivers to drive screws into parts. The fast rotation speed of the screw can melt/strip plastic parts or cross-thread into the aluminum parts.

Lightly sand the edges of the carbon fiber pieces using a medium grade sandpaper to avoid splinters. A thin bead of super glue can be used to seal the edges of the carbon fiber for more protection against chips and splinters.

Front Kick-Up Assembly

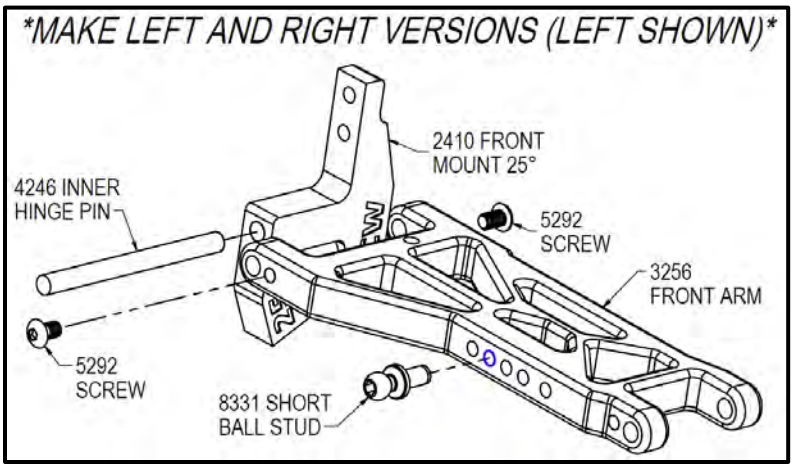

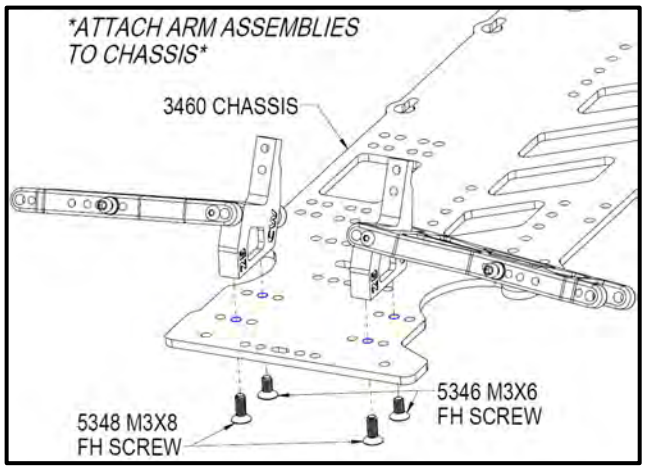

Caster Block Assembly

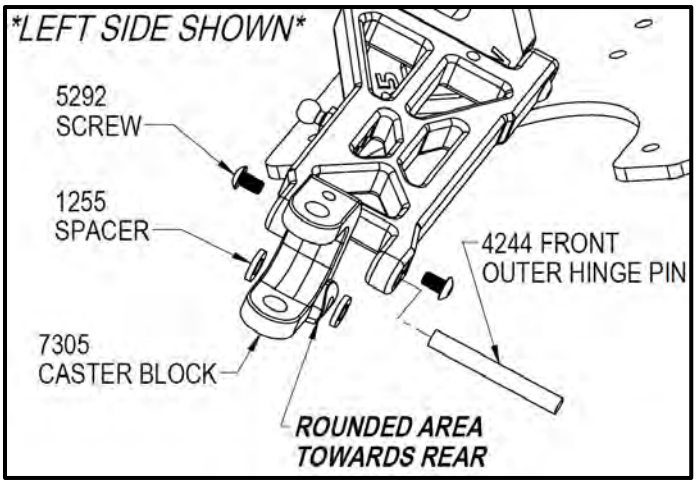

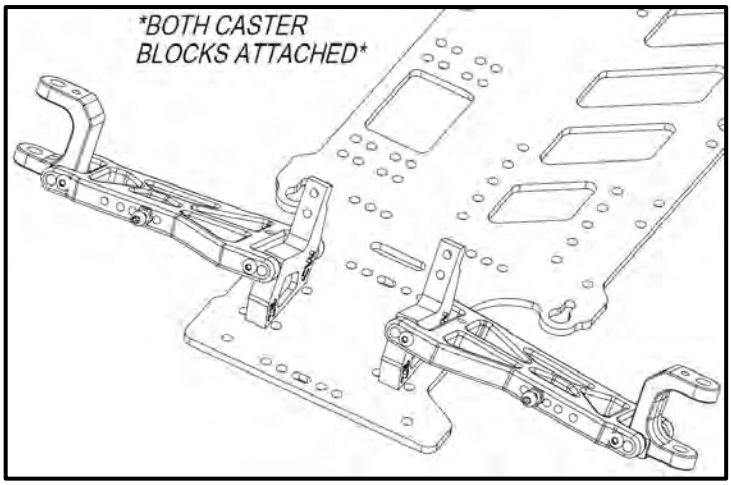

Steering Block Assembly

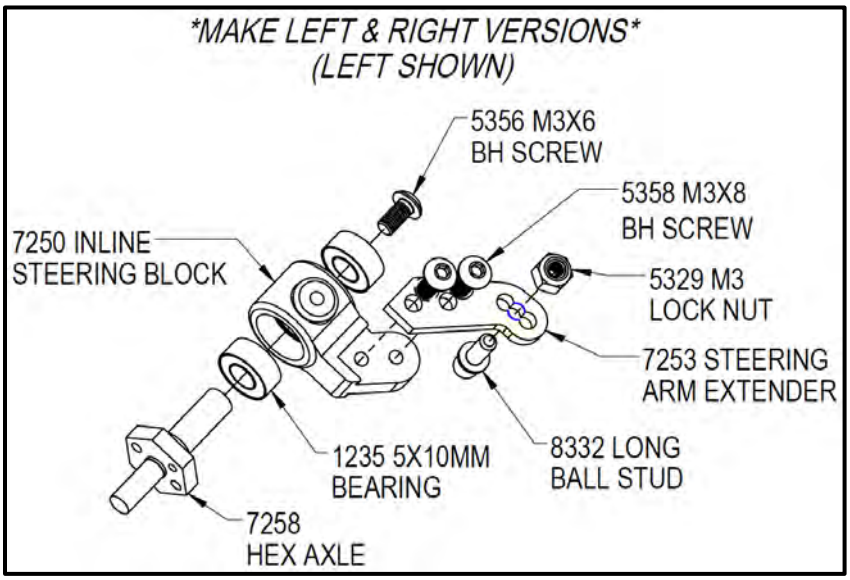

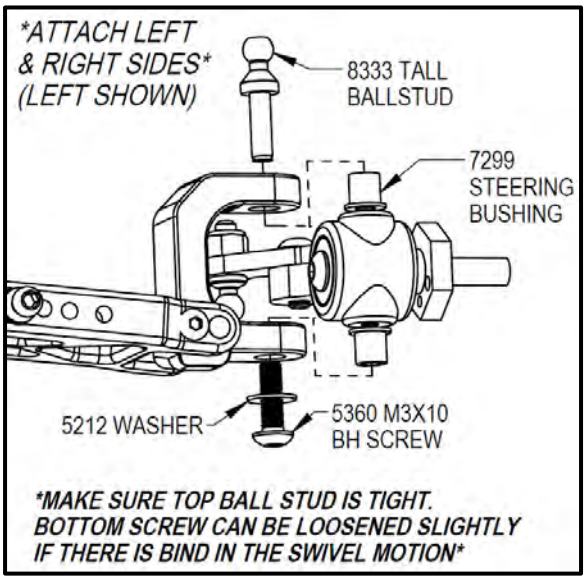

Front Shock Tower Assembly

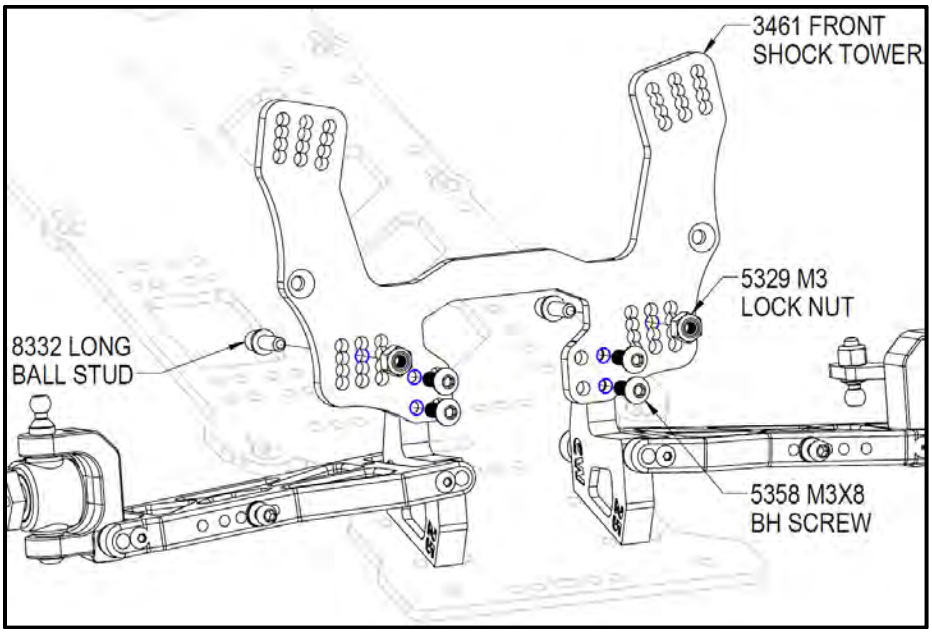

Bellcranks

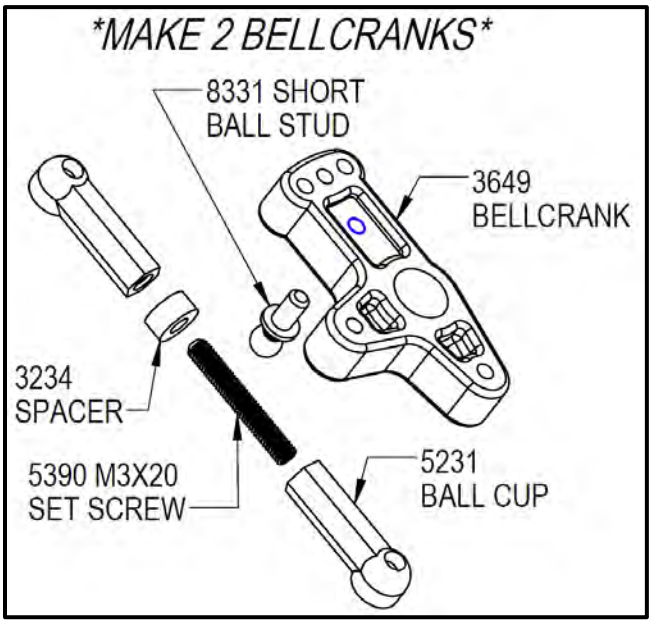

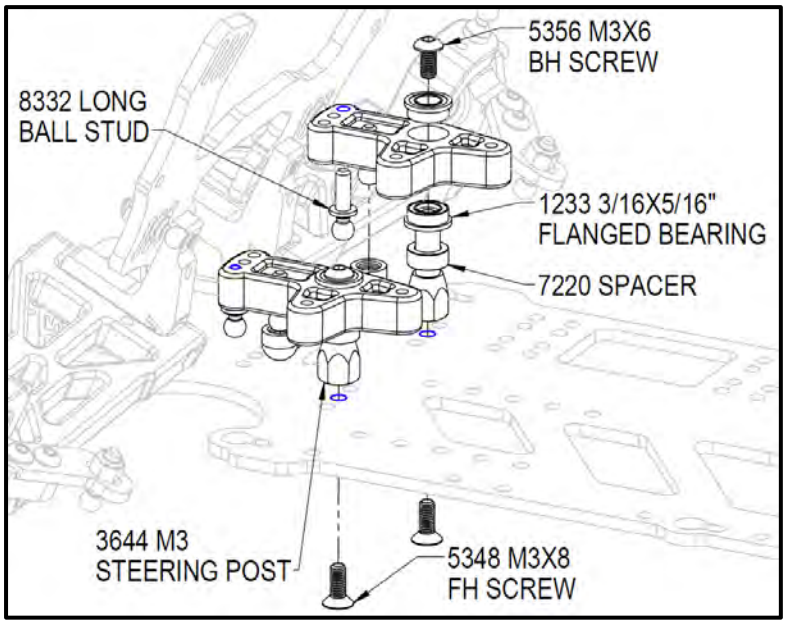

Steering/Front Camber Links

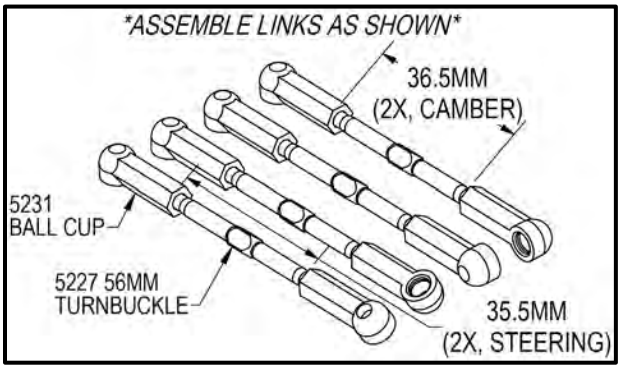

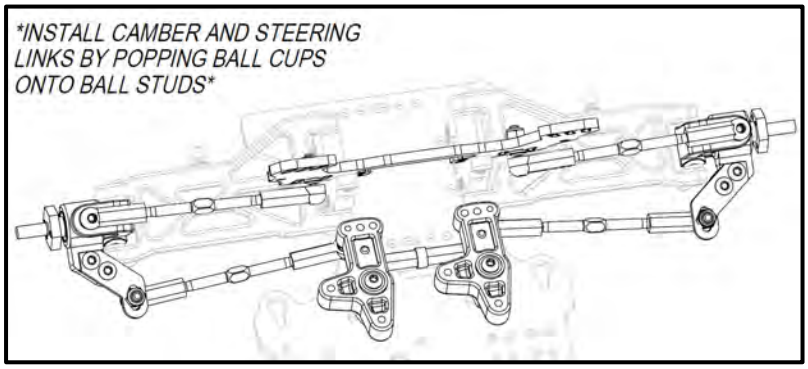

Front Bumper Assembly

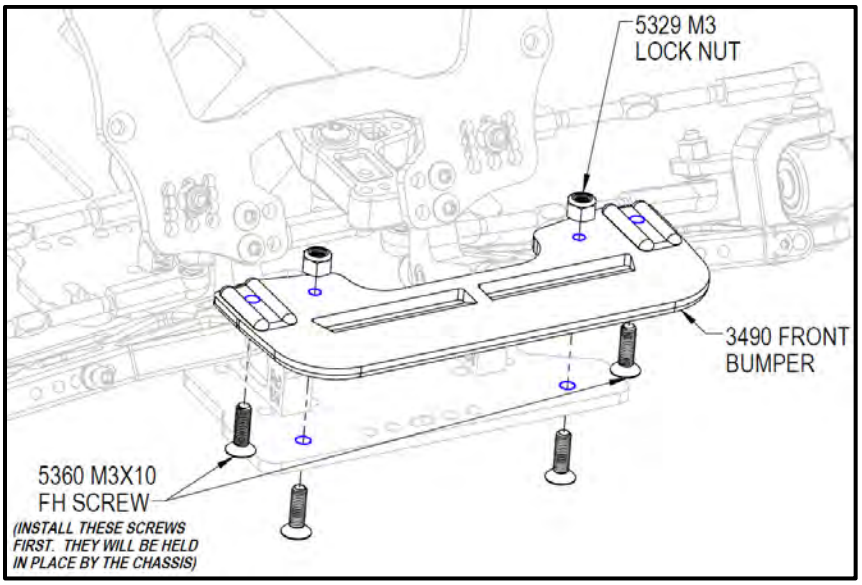

Servo Assembly

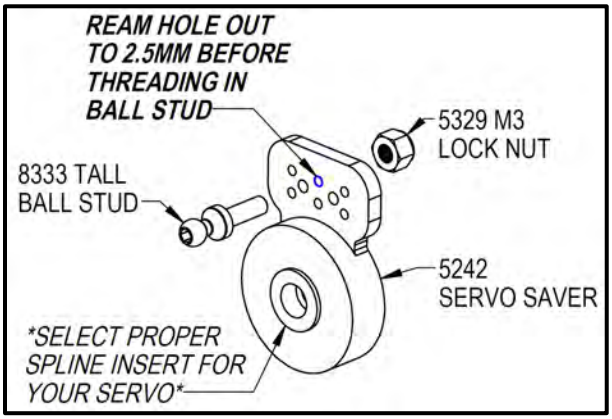

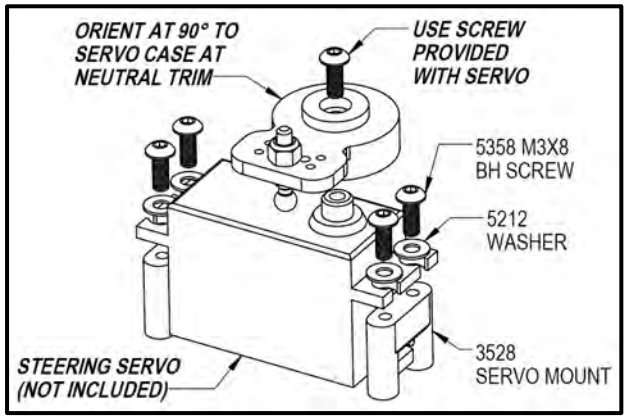

Servo Mounting

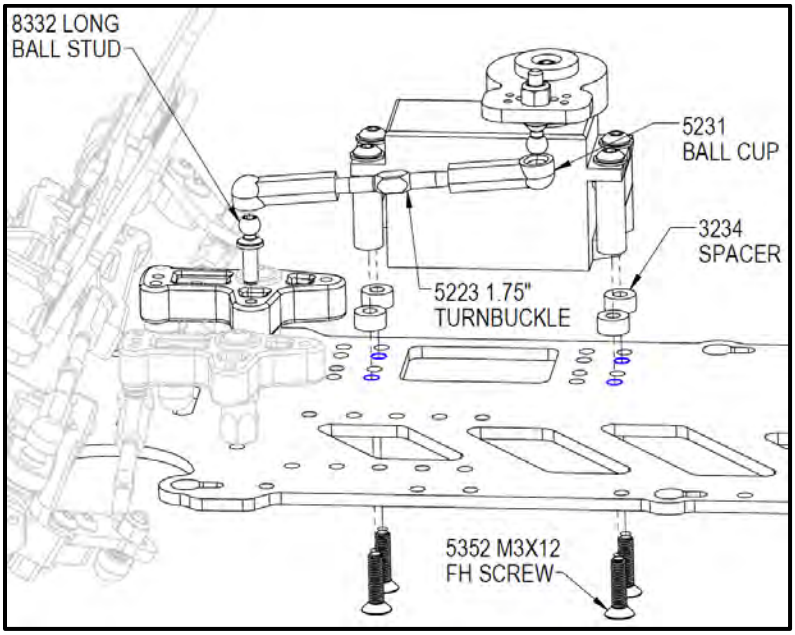

Rear Adjustable Arm Assembly

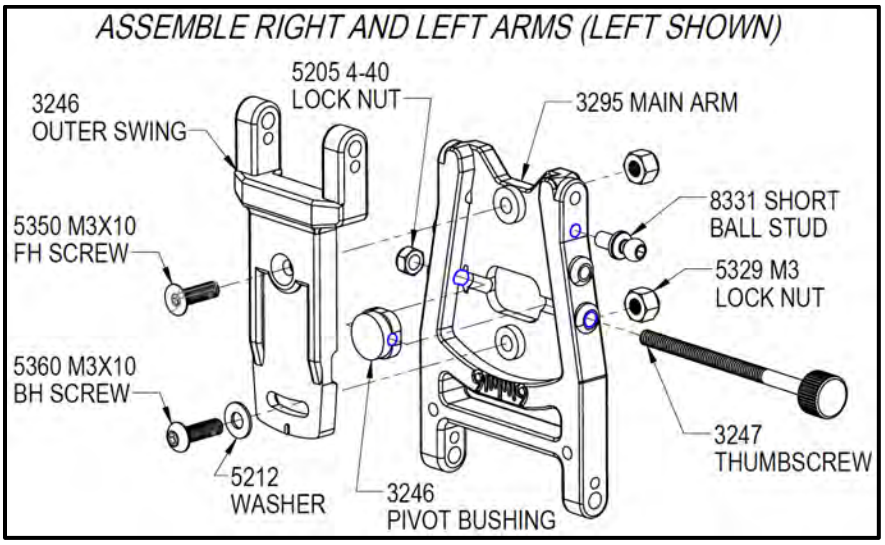

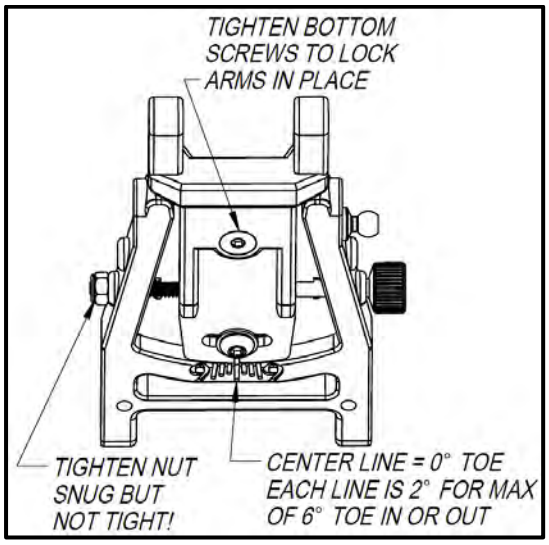

Rear Suspension Mount Assembly

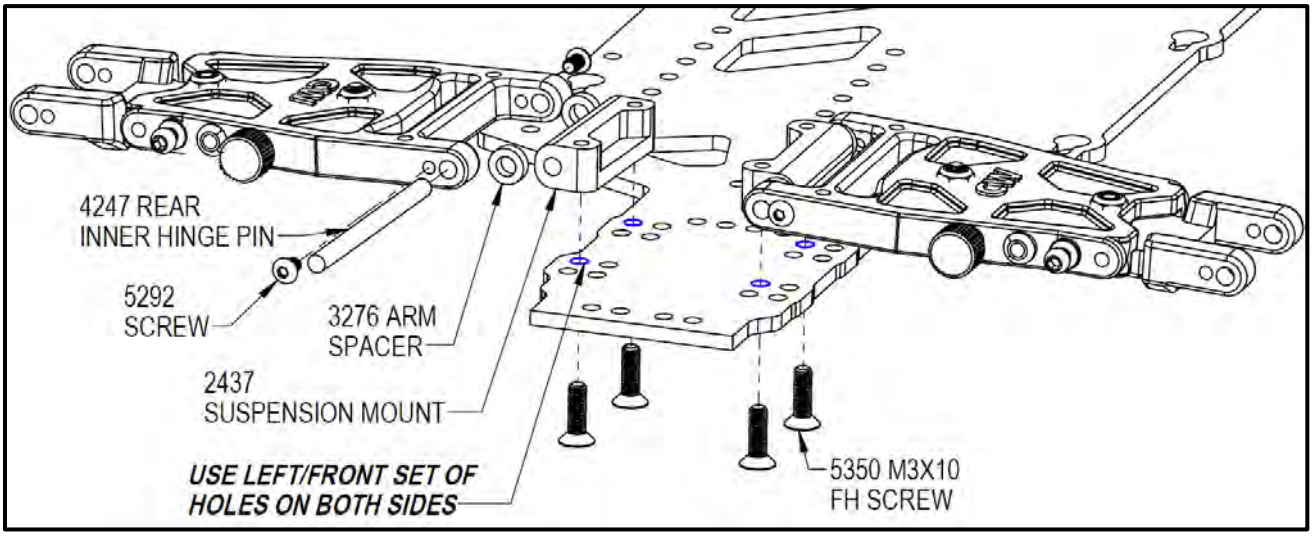

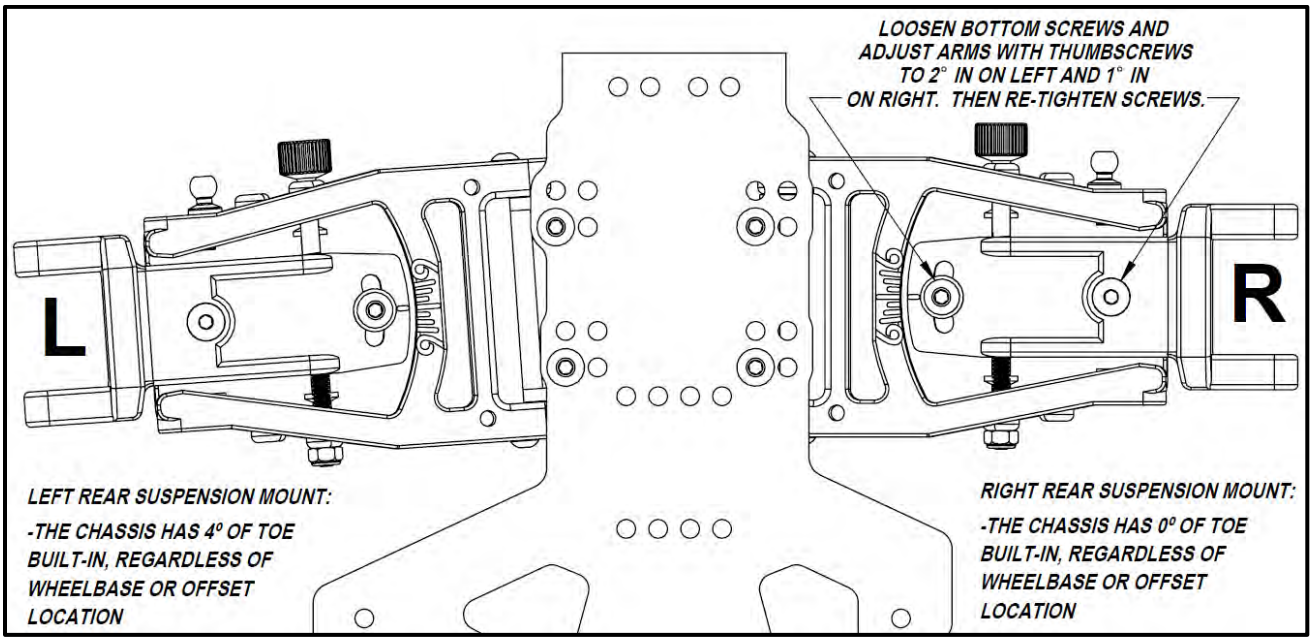

Differential Assembly

STEP 1 - PREP THE THRUST ASSEMBLY

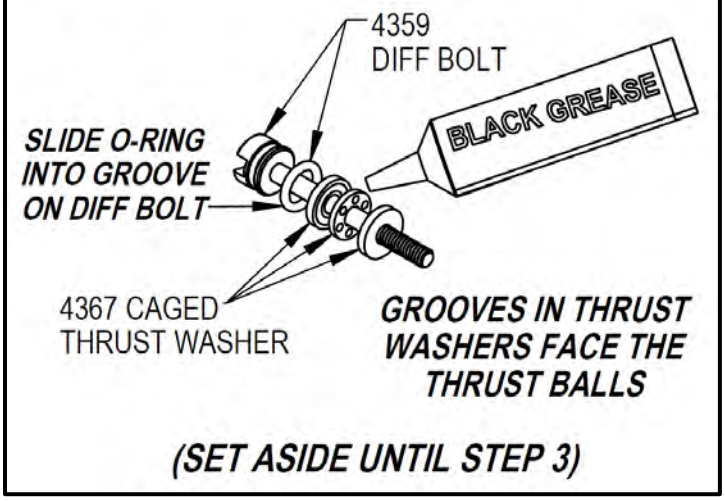

(SET ASIDE UNTIL STEP 3)

STEP 2 - ASSEMBLE THE MALE DIFF HALF

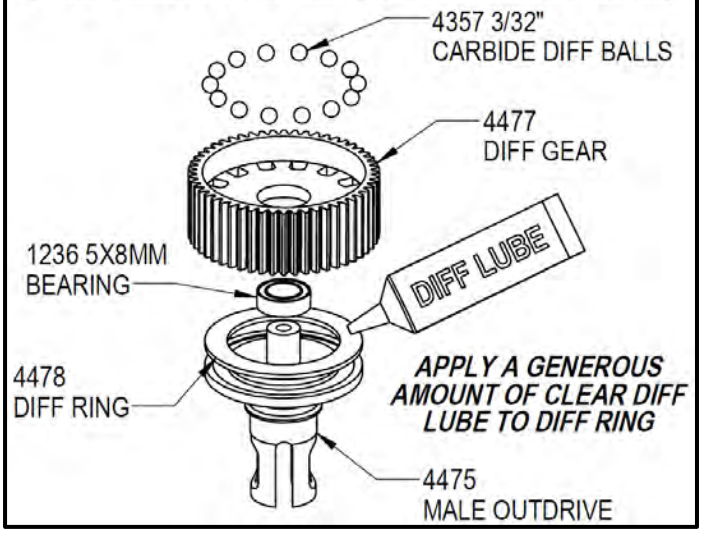

STEP 3 - FINAL DIFF ASSEMBLY

TIGHTEN THE DIFF BOLT INTO THE "T" NUT TO COMPRESS THE SPRING AND SET THE DIFF ACTION. DO NOT OVERTIGHTEN! WHEN THE SPRING FEELS NEARLY COMPRESSED, BACK THE BOLT OUT 1/8 TURN.

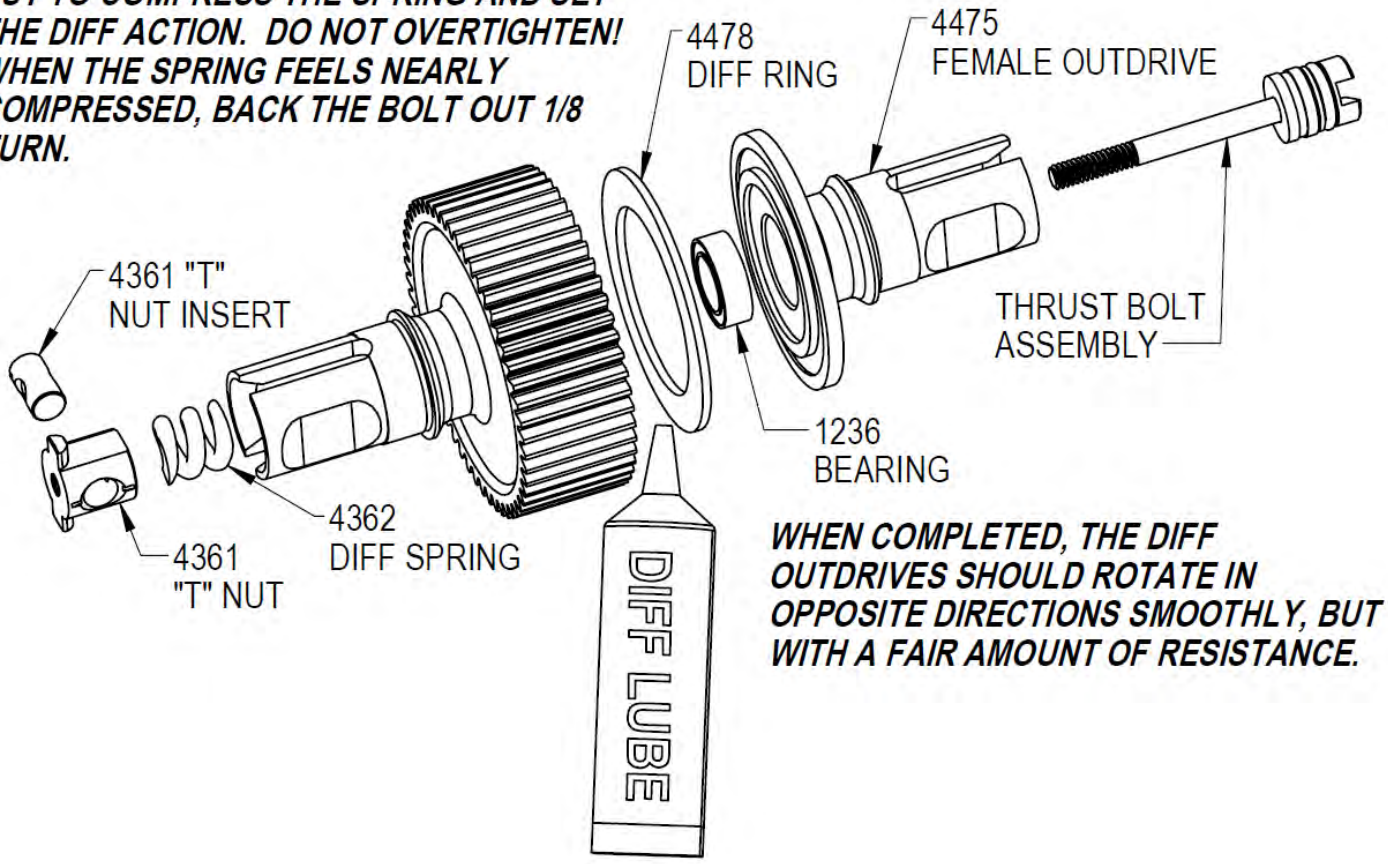

WHEN COMPLETED, THE DIFF OUTDRIVES SHOULD ROTATE IN OPPOSITE DIRECTIONS SMOOTHLY, BUT WITH A FAIR AMOUNT OF RESISTANCE.

Transmission Assembly

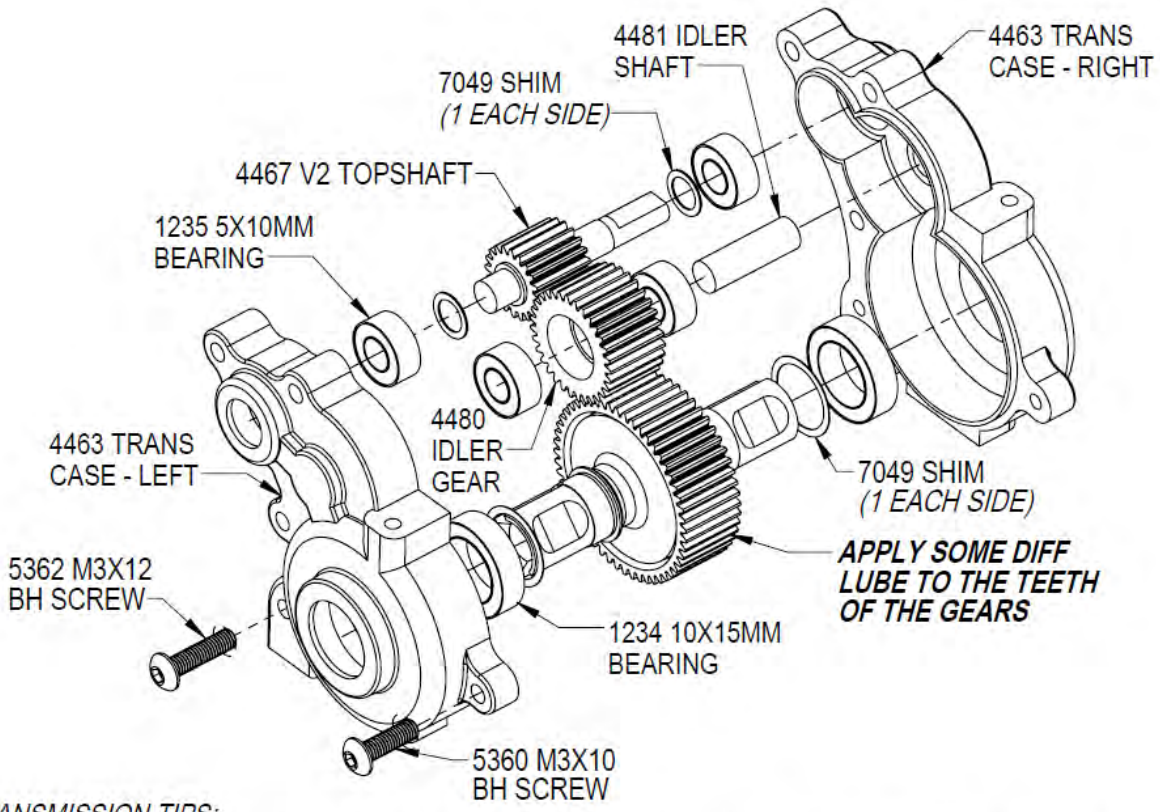

TRANSMISSION TIPS:

1. *BEARINGS CAN BE SPRAYED OUT WITH MOTOR SPRAY AND THEN OILED WITH A LITE OIL FOR BETTER FREE-SPIN. (WE RECOMMEND LEAVING THE GREASE IN THE WHEEL AND HUB BEARINGS FOR ADDED PROTECTION FROM DIRT.)*
2. *ORIENT THE DIFF SCREW TOWARD THE RIGHT SIDE.*
3. *TRANSMISSION IS 2.6 RATIO REDUCTION.*

TROUBLESHOOTING:

1. *IF THE OUTDRIVES ARE HOT TO THE TOUCH AFTER A RUN, THE DIFF IS SLIPPING AND NEEDS TIGHTENED.*
2. *A MELTED IDLER OR DIFF GEAR IS USUALLY CAUSED BY A BAD BEARING.*
3. *REGULARLY CHECK TRANSMISSION PARTS FOR WEAR AND REPLACE AS NEEDED.*

To install the included optional slipper assembly, please visit page 15 for instructions*

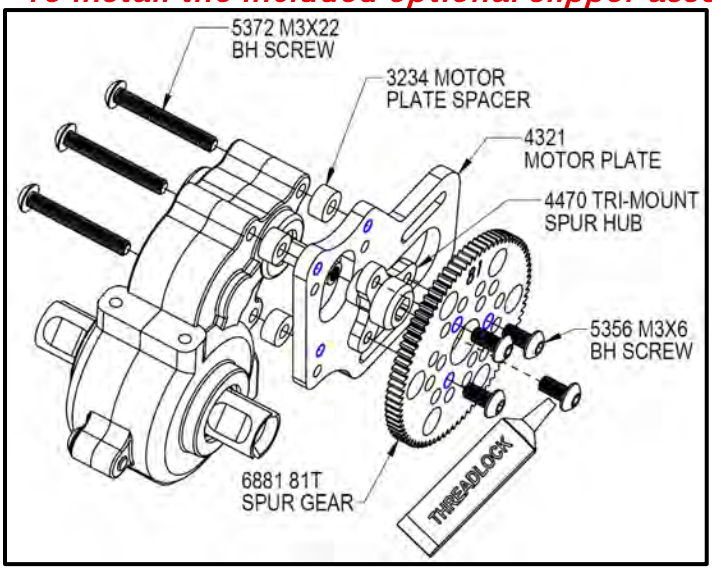

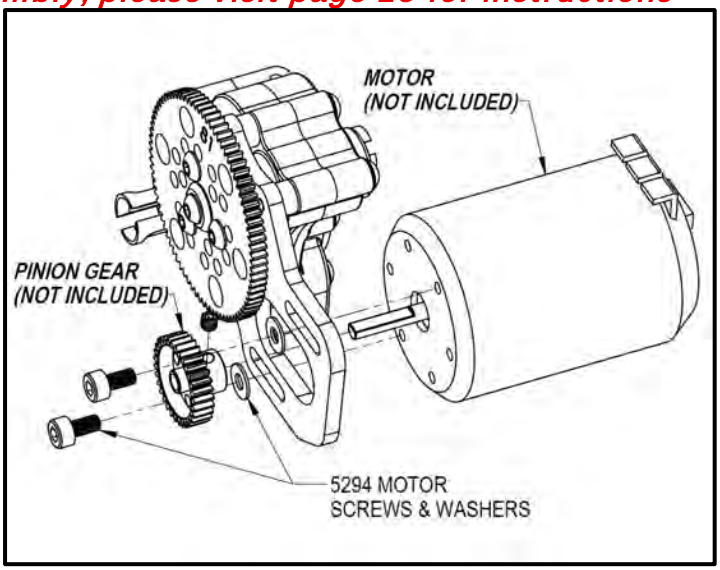

Transmission Mounting & Camber Mount Assembly

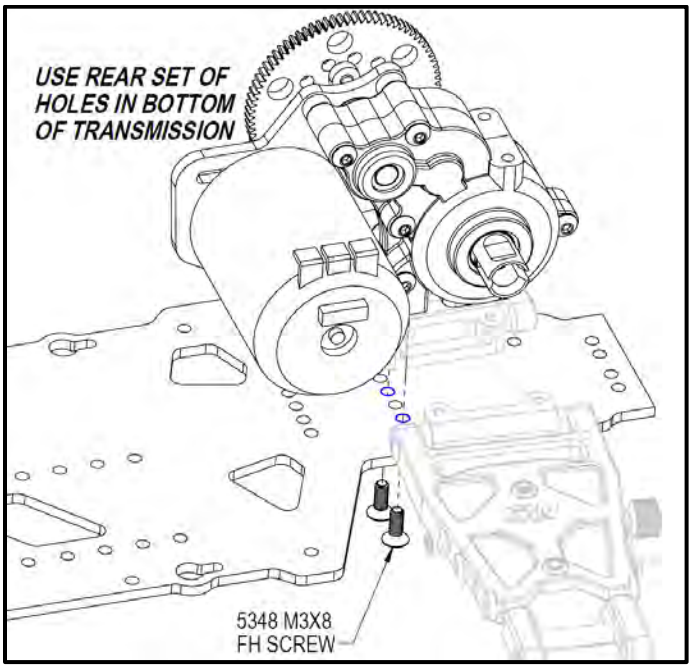

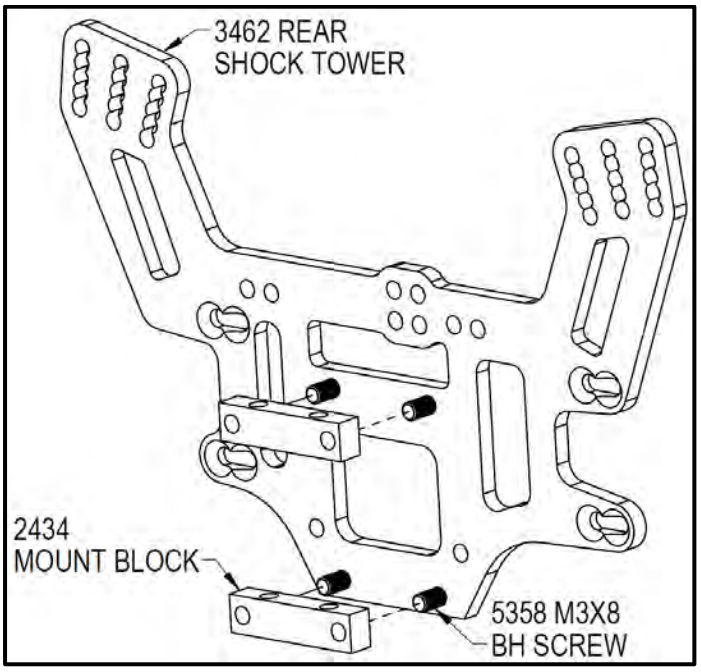

Rear Shock Tower Assembly

THE FOLLOWING ITEMS FOR THIS STEP WILL BE USED FROM THE CAGE BAG:

1PC- 5386 M3X10 SET SCREW
2PCS- 3434 REAR BUMPER
4PCS- 5350 M3X10 FH SCREW

CONNECT THE REAR BUMPERS TOGETHER BEFORE ATTACHING THEM TO THE SHOCK TOWER

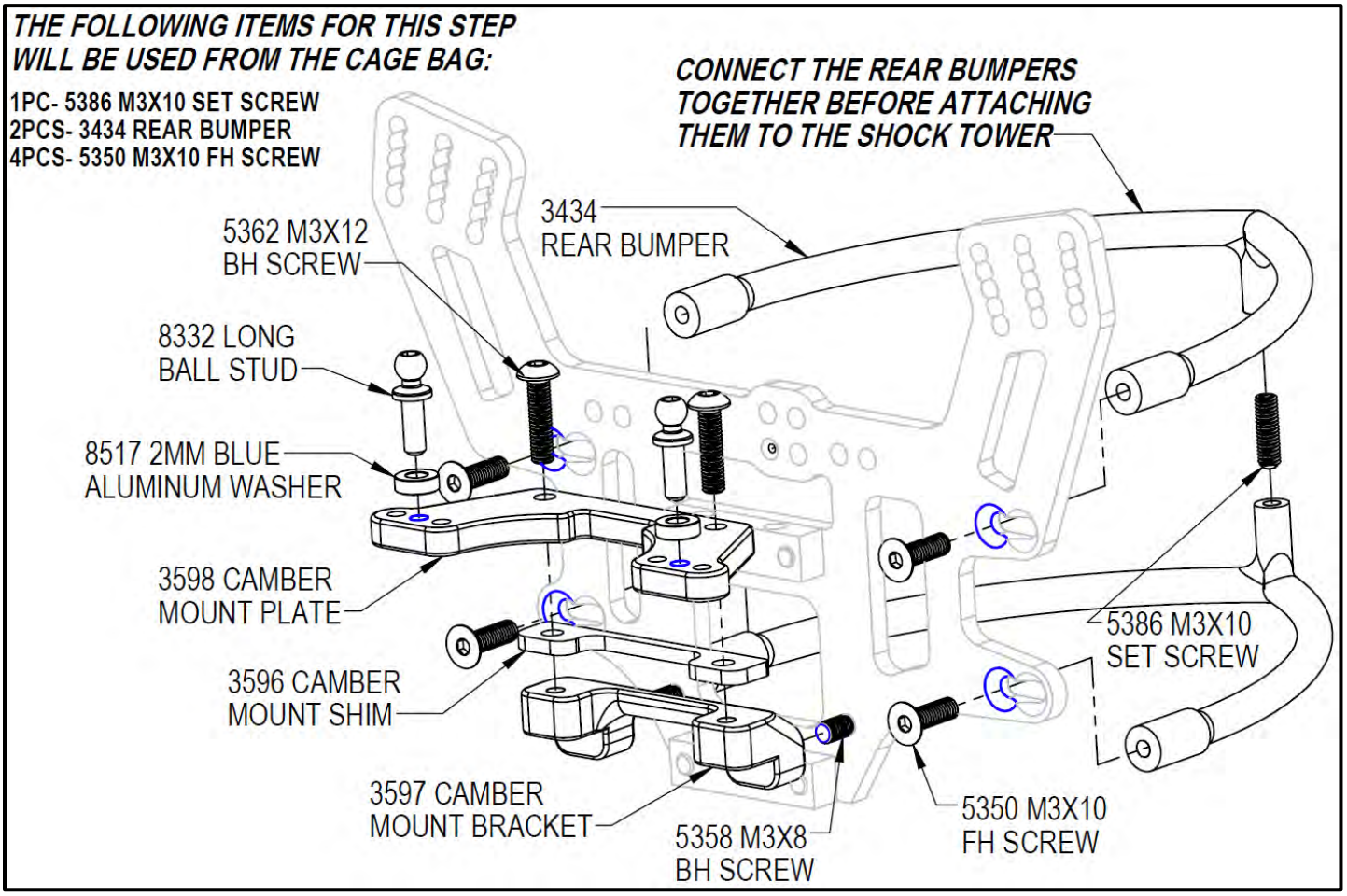

Rear Shock Tower Installation

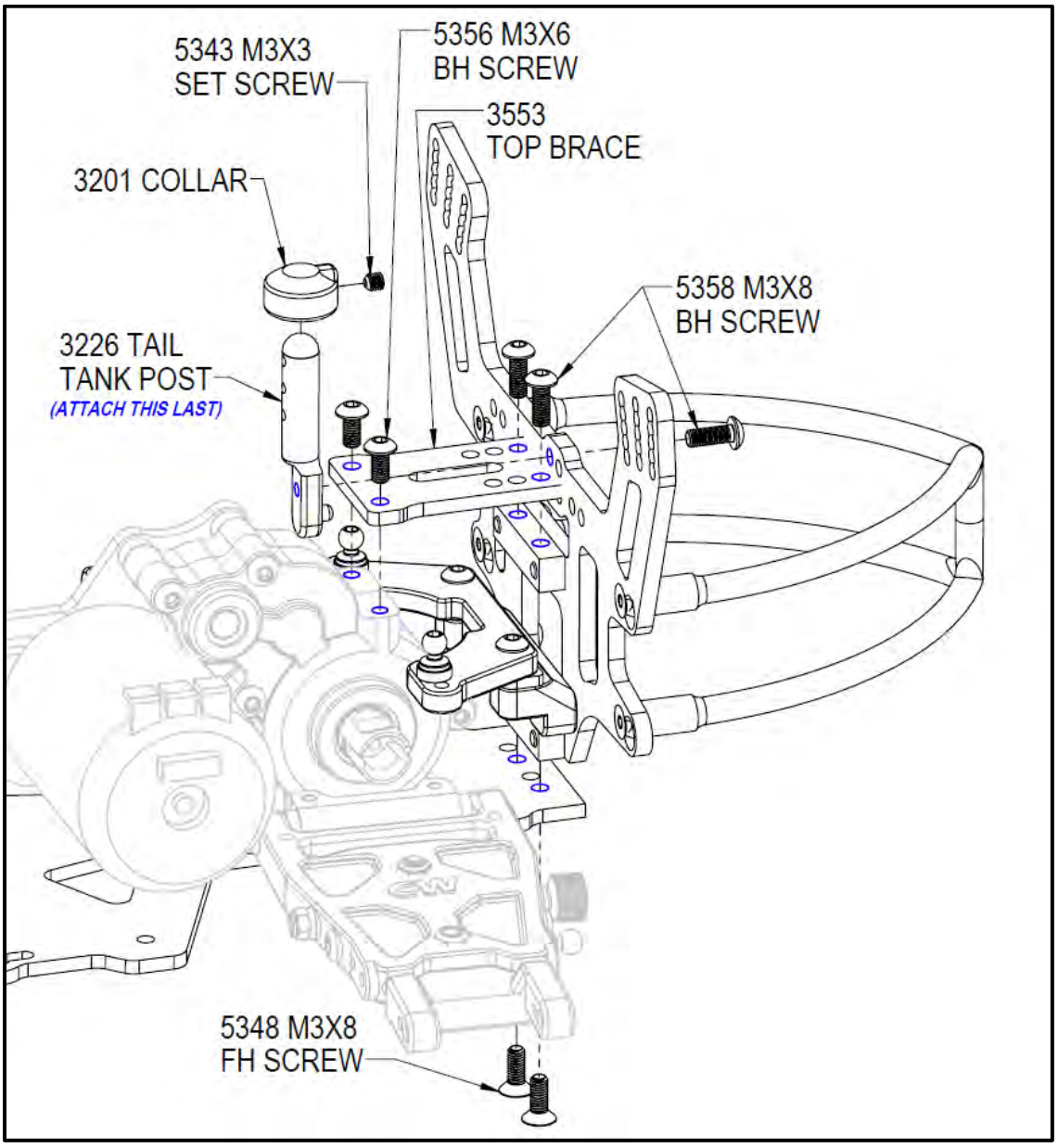

Rear Hub Carrier & Drive Shaft Assembly

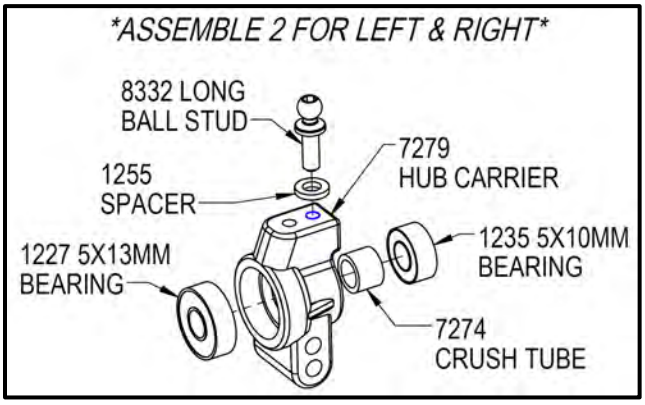

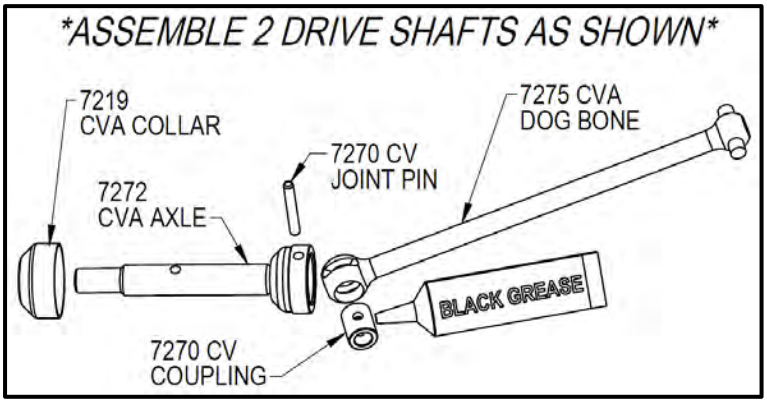

Rear Hub Carrier & Drive Shaft Installation

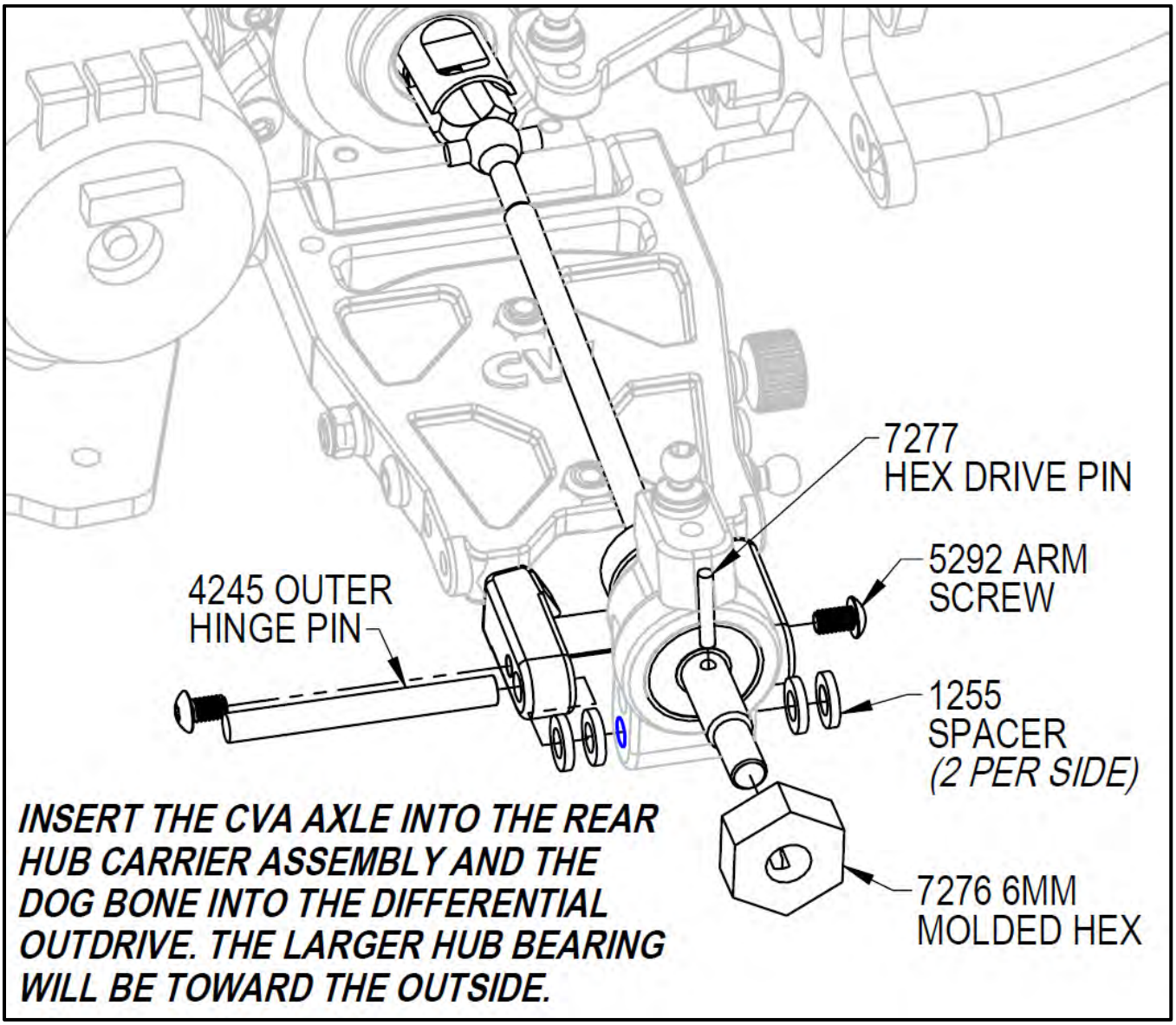

Rear Camber Link Assembly

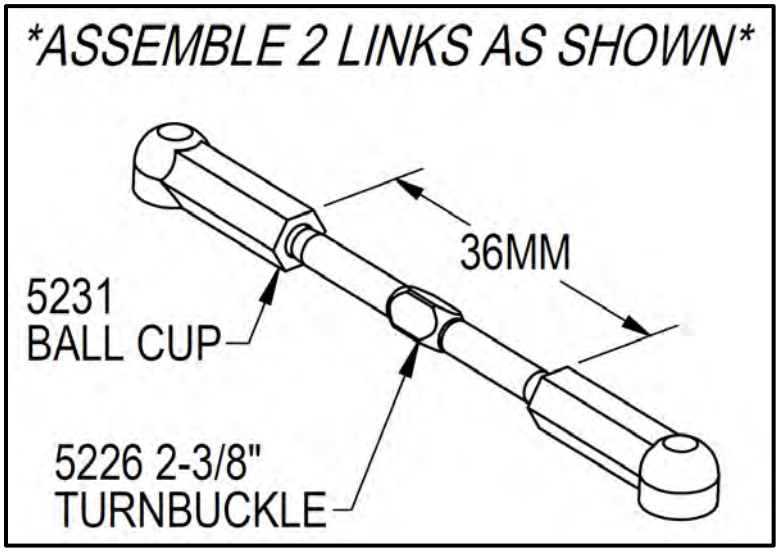

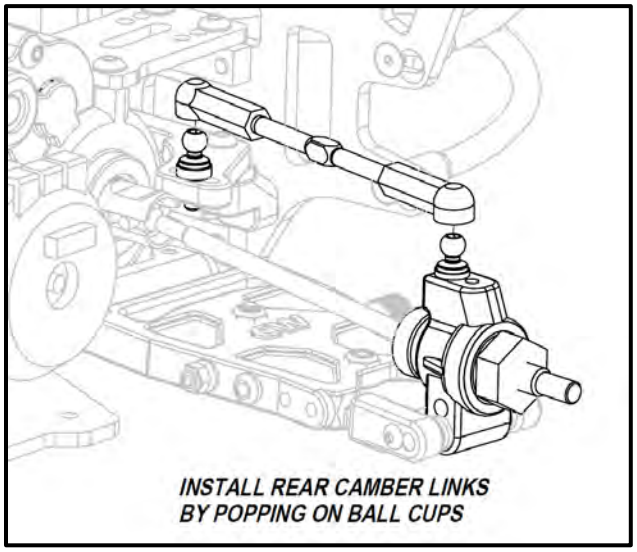

Shock Assembly

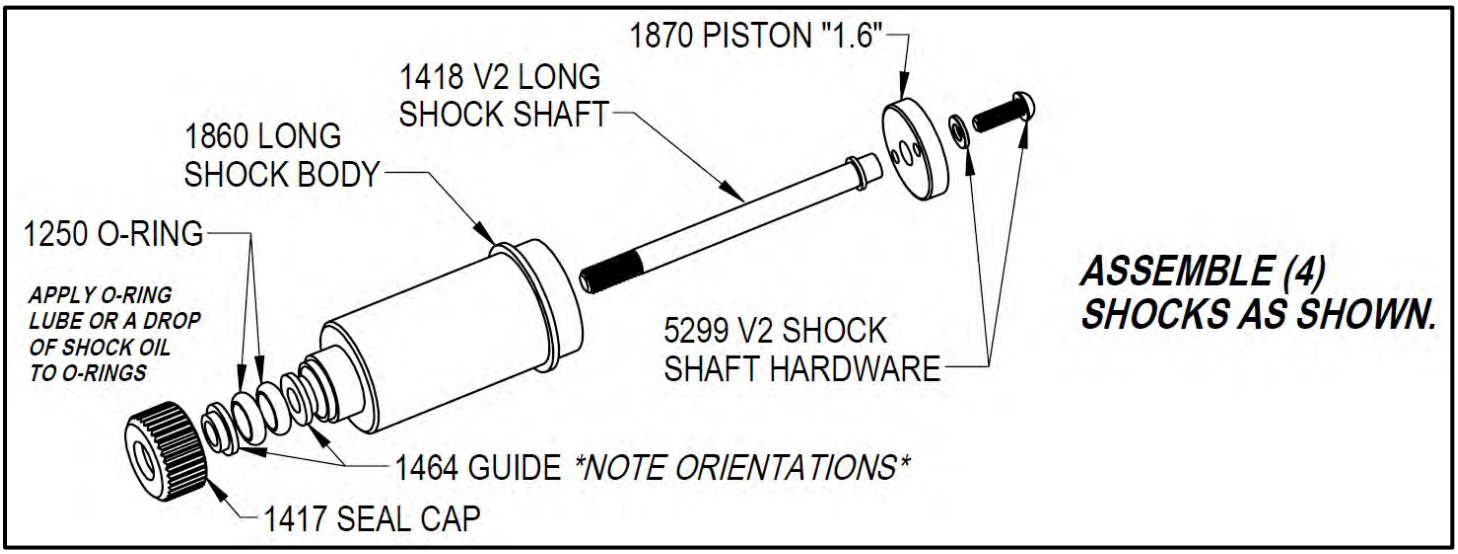

ASSEMBLE (4) SHOCKS AS SHOWN.

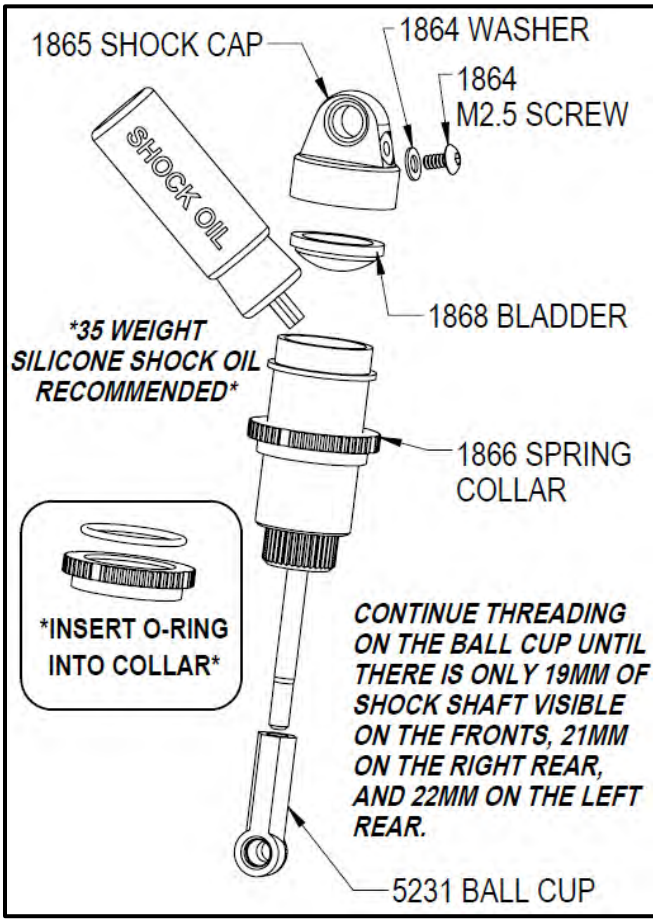

SHOCK FILLING INSTRUCTIONS

1. *INSTALL SCREW & WASHER INTO SHOCK CAP.*
2. *EXTEND THE SHOCK AND FILL WITH SHOCK OIL. LEAVE SPACE AT THE TOP FOR THE BLADDER.*
3. *MOVE THE SHOCK SHAFT UP AND DOWN SLOWLY TO REMOVE ANY AIR BUBBLES.*
4. *BEGIN TO SCREW ON THE SHOCK CAP AND BLADDER (1 TO 2 TURNS).*
5. *SLOWLY PUSH THE SHAFT ALL THE WAY INTO THE SHOCK. ANY EXCESS OIL WILL SEEP OUT OF THE BLEED HOLE IN THE BOTTOM OF THE SHOCK CAP.*
6. *FINISH SCREWING ON THE SHOCK CAP ALL THE WAY UNTIL HAND TIGHT.*
7. *THE SHOCK SHAFT SHOULD MOVE SMOOTHLY UP AND DOWN. IF IT GETS TIGHT NEAR THE TOP - THERE IS TOO MUCH OIL IN THE SHOCK. RE-BLEED USING LESS OIL.*

Shock Assembly continued

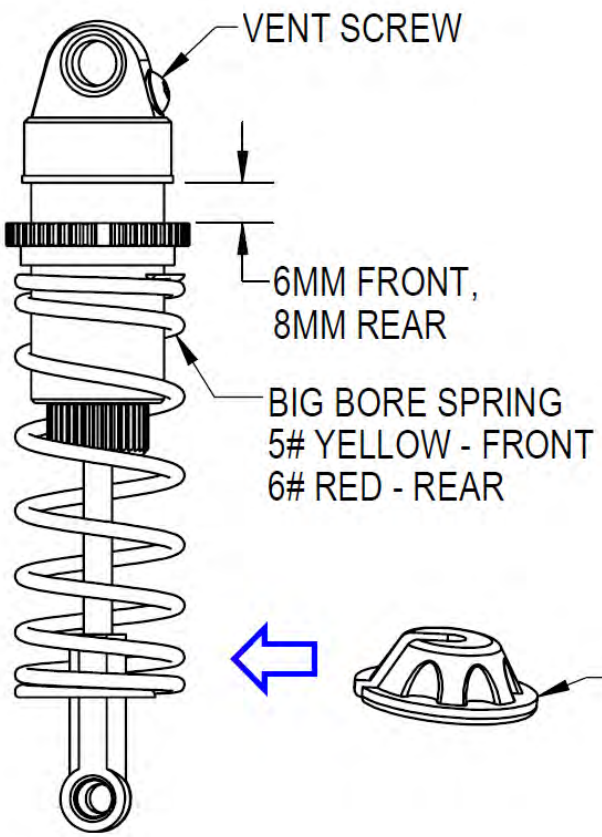

USE THE VENT SCREW TO ADJUST THE AMOUNT OF REBOUND THE SHOCK HAS. TO REMOVE REBOUND TAKE THE SCREW OUT AND COMPRESS THE SHAFT. WITH THE SHAFT COMPRESSED, REINSTALL THE SCREW.

OR REMOVE THE SCREW TO REMOVE ALL PRESSURE FROM THE SHOCK.

Shock Mounting

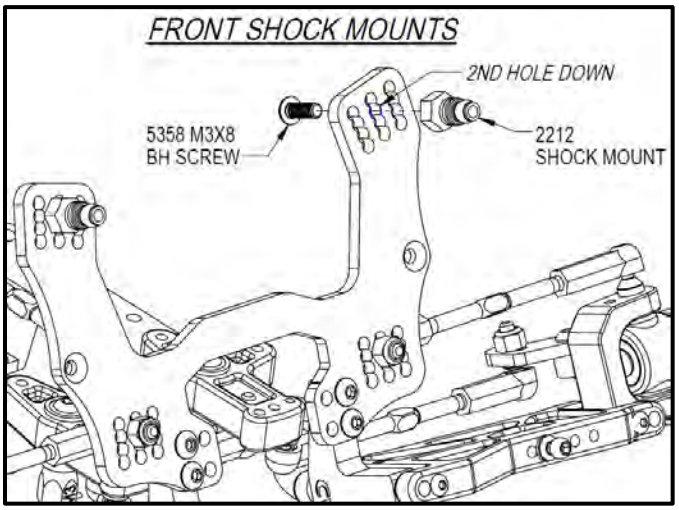

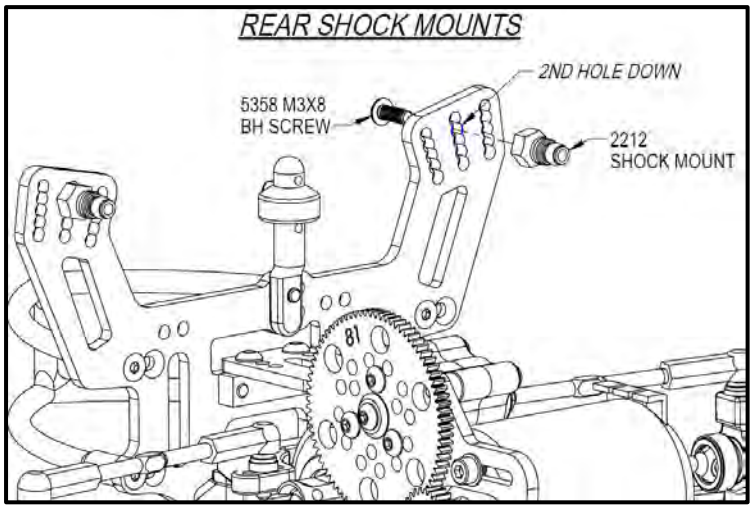

Shock Mounting (cont.)

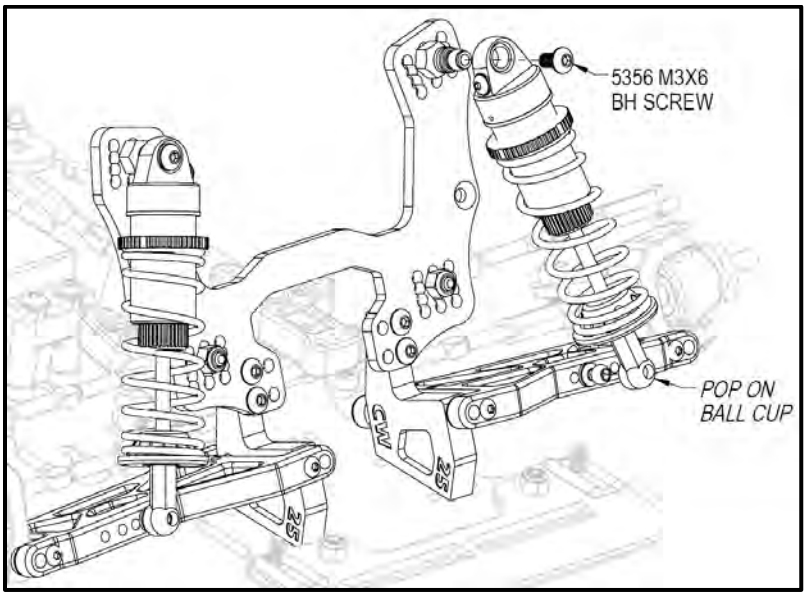

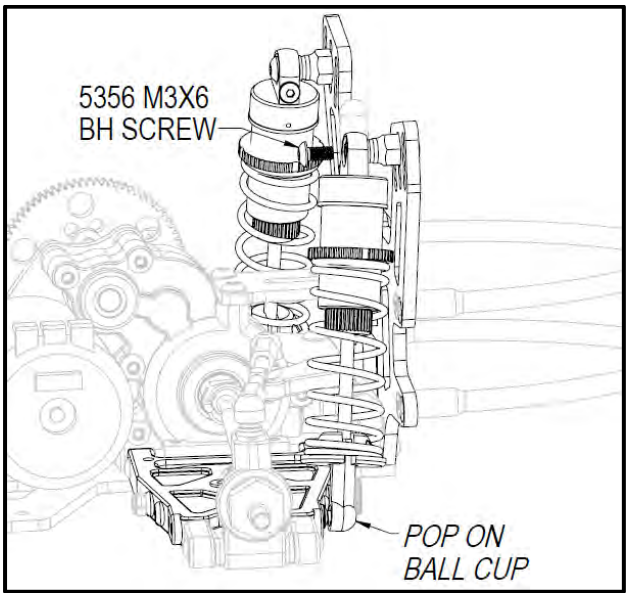

Battery Mount Installation

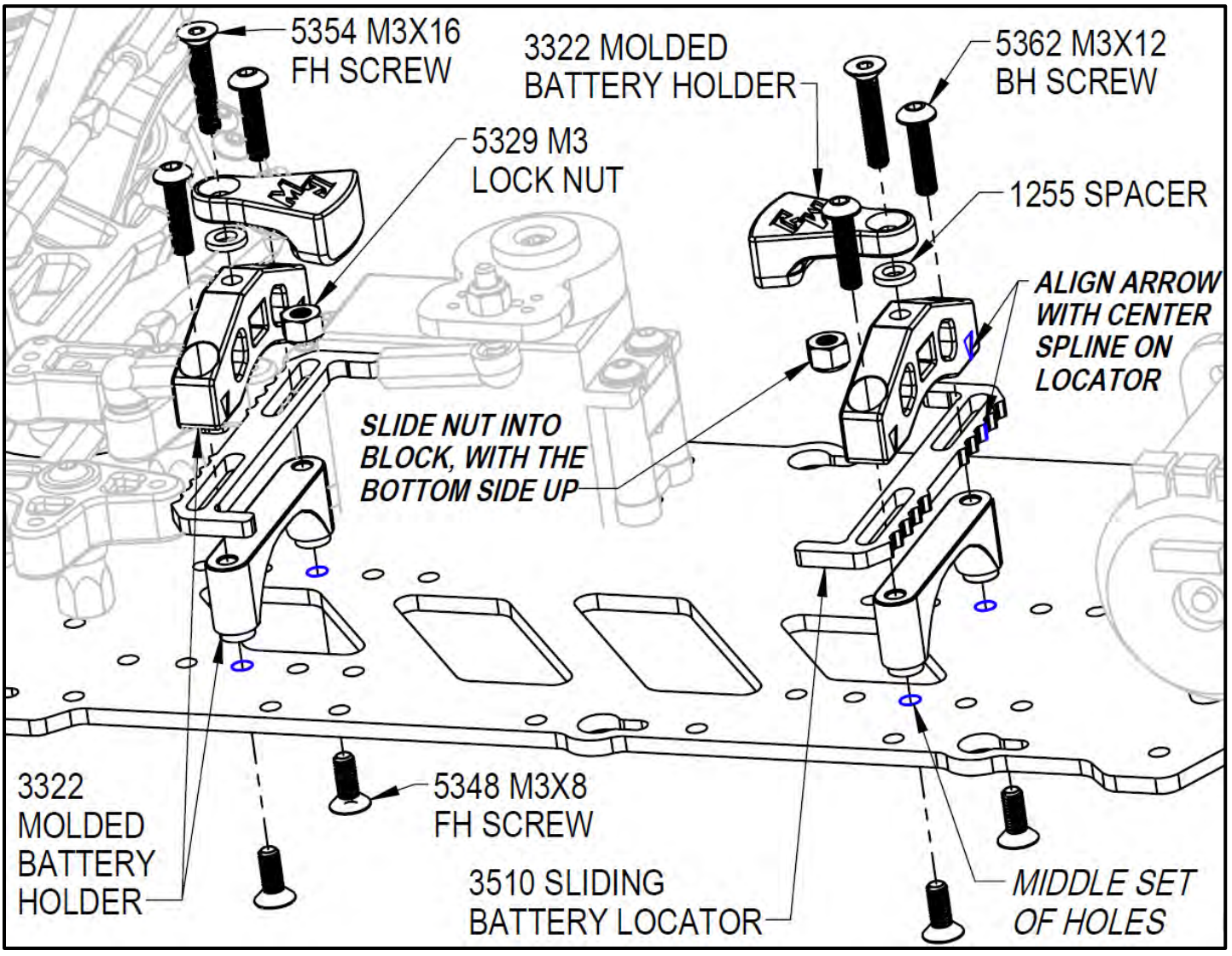

Electronics Mounting

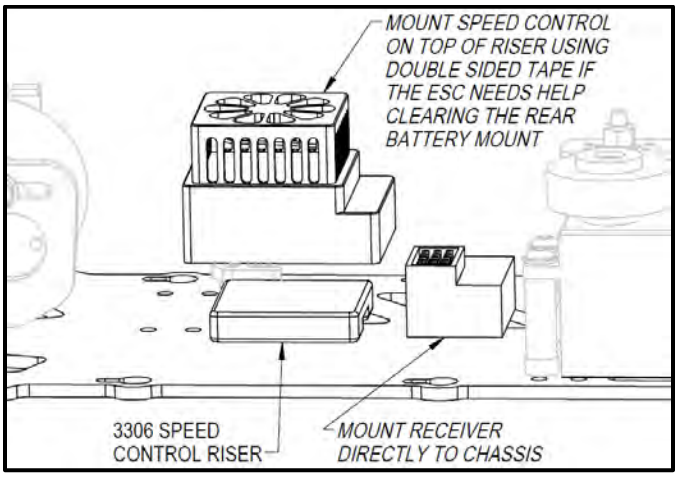

Slipper Installation (Optional)

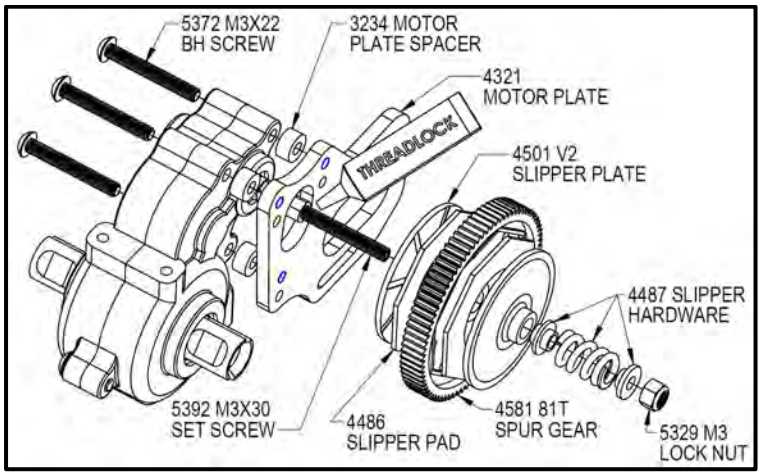

Body & Cage Preparation:

Prepare the body and wings by trimming all the pieces on the molded cut lines. For the nose and tail tank sections, refer to the below steps to see where additional trimming is necessary beyond the molded cut lines. It is recommended to cut out, trim, and drill all holes in everything before painting to lessen the chance of scratching the paint. Use a 3mm drill bit where screws pass through the body & wing pieces, and a 6mm drill bit where a body post will pass through.

Once all parts are painted, remove the protective overspray film and apply all decals/wraps. You will then need to use a sharp hobby knife to remove any material that is covering the holes you need screws to pass through for assembly.

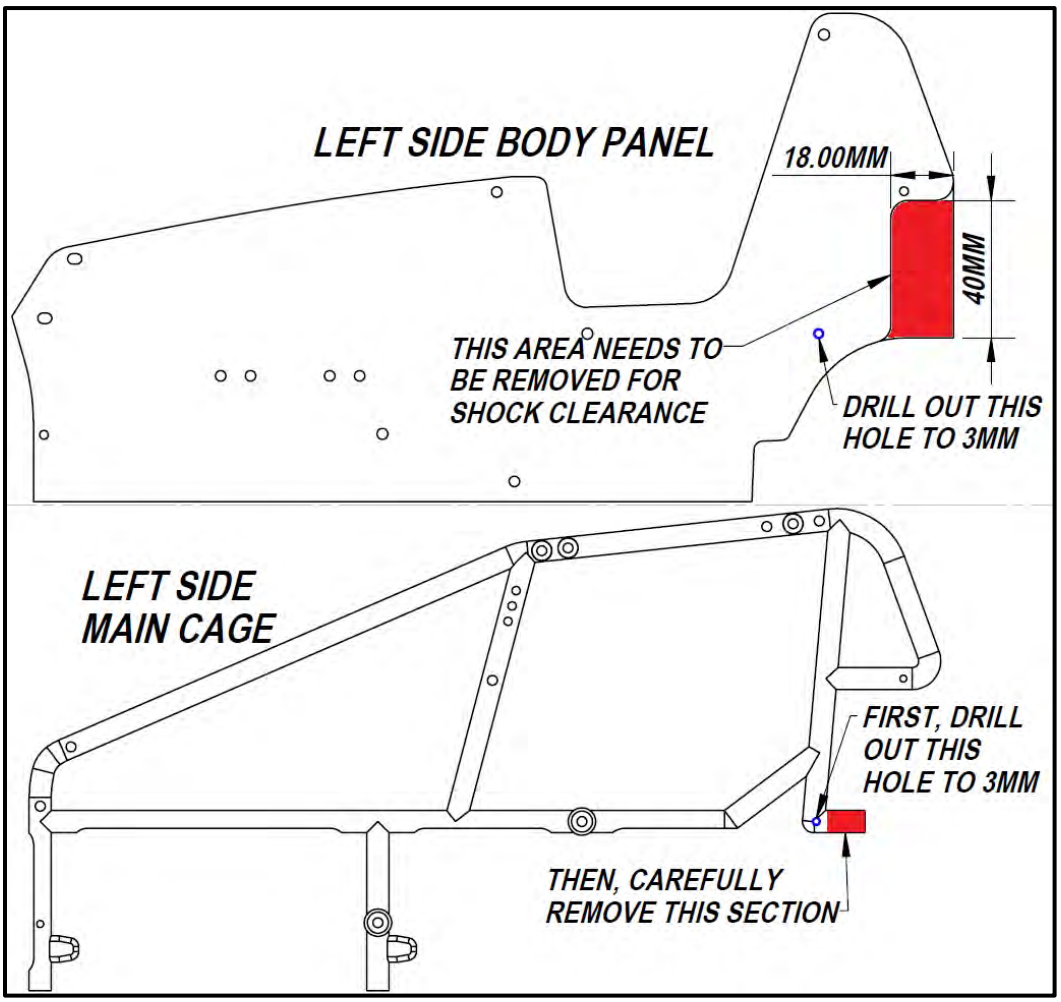

Cage & Body Panel Assembly

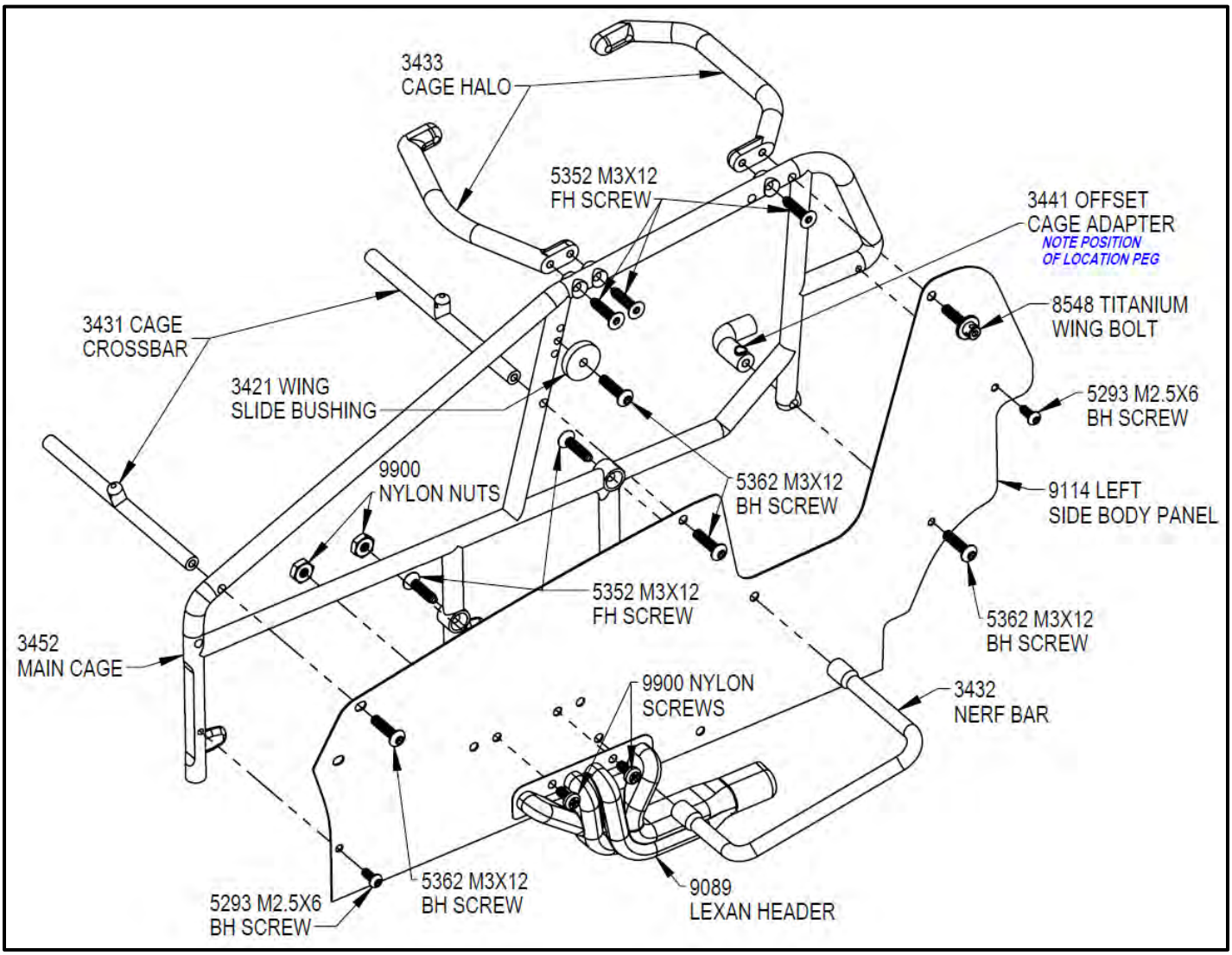

Cage & Body Panel Assembly Continued

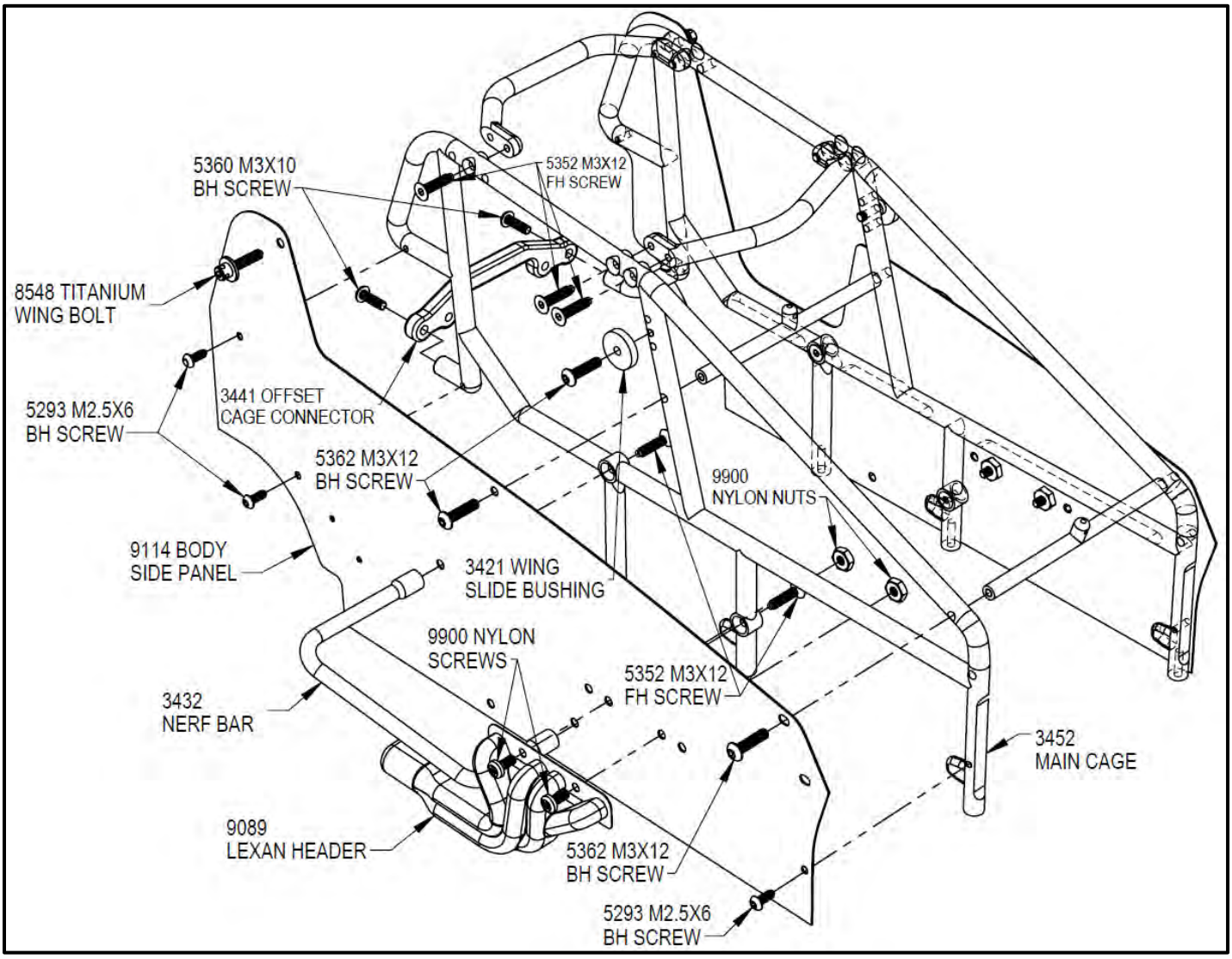

Hood Installation

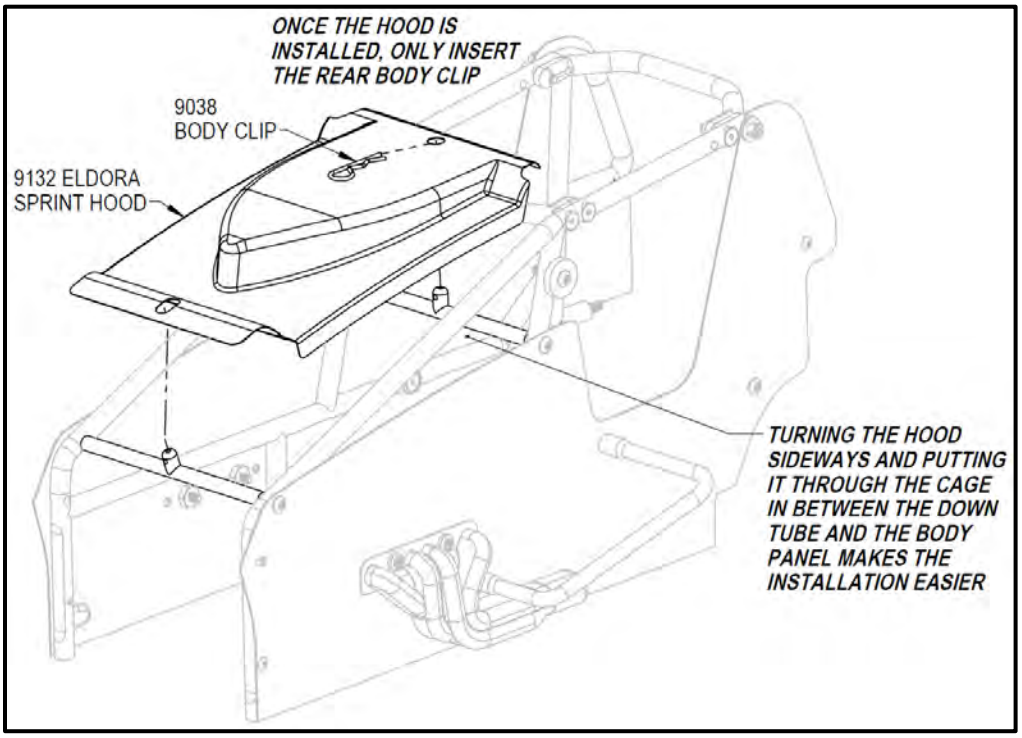

Cage Installation

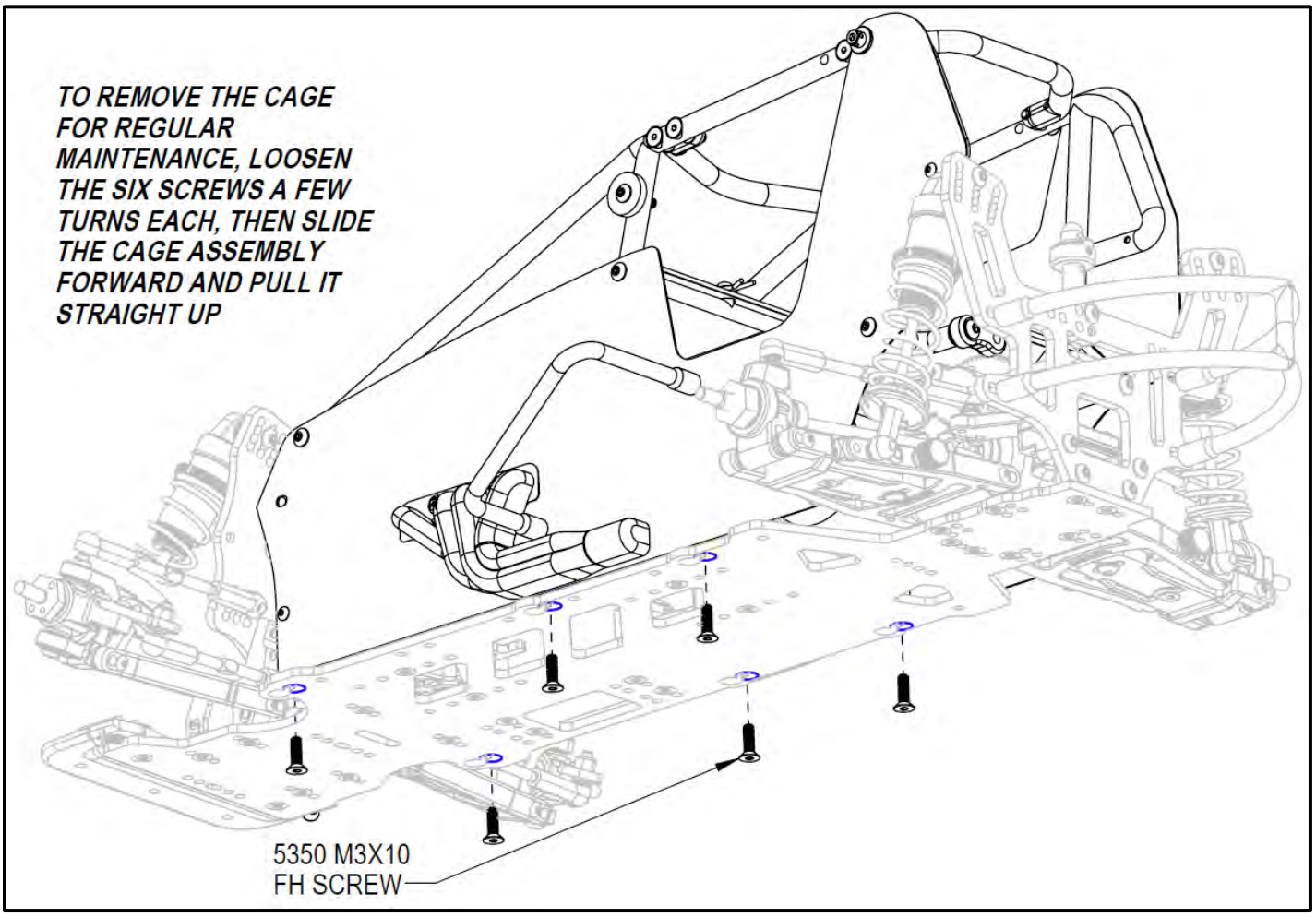

Nose Trimming

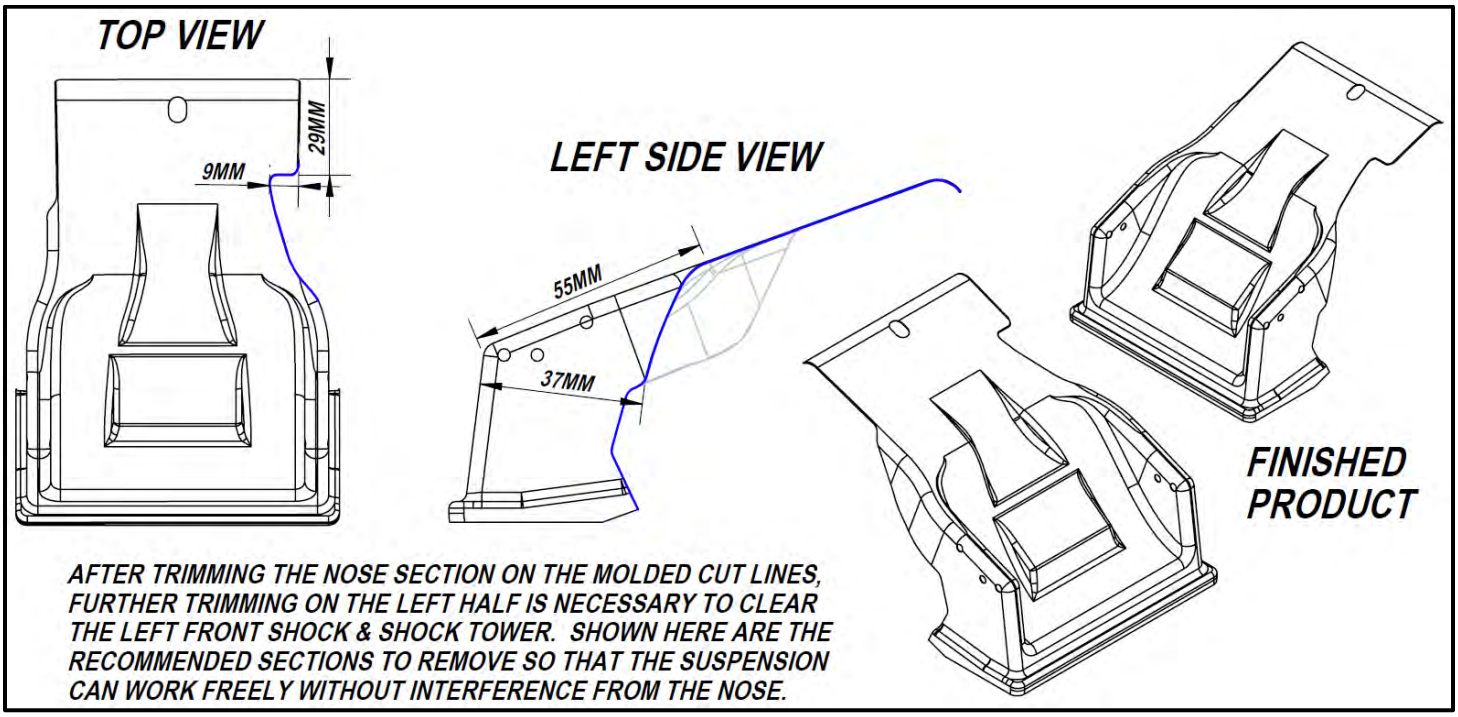

Nose Assembly

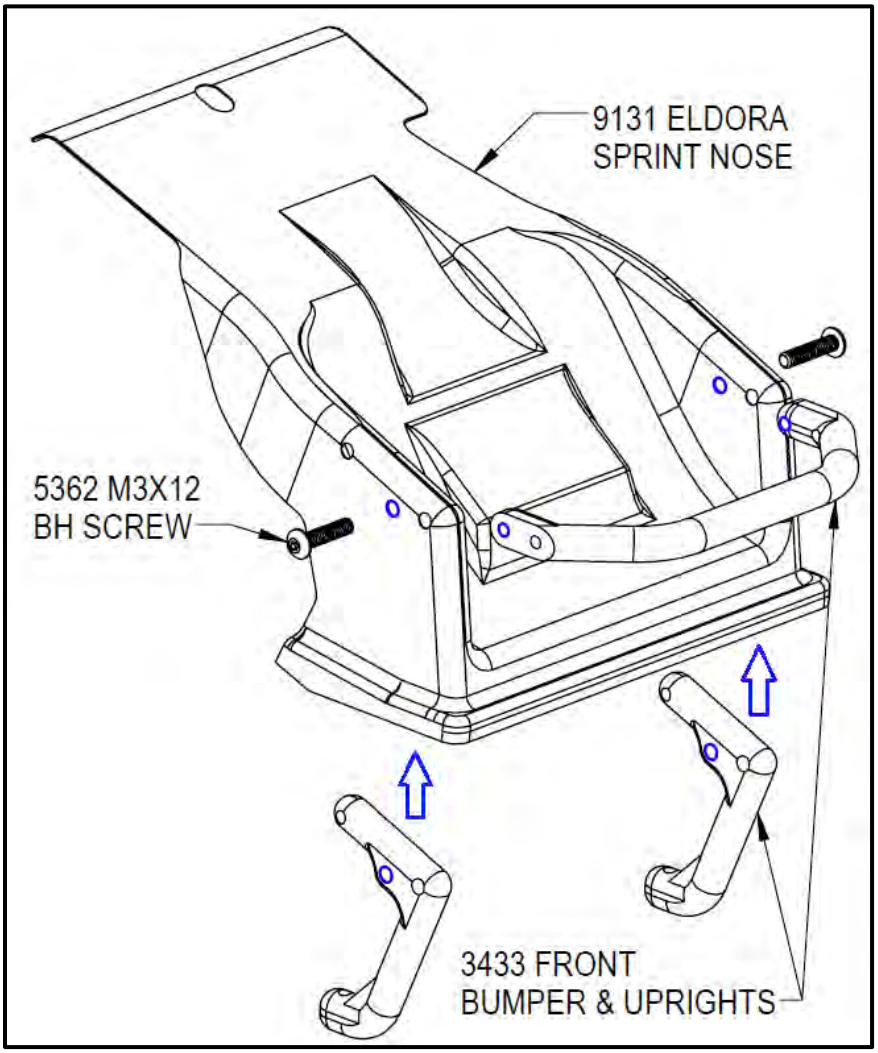

Front Wing Assembly

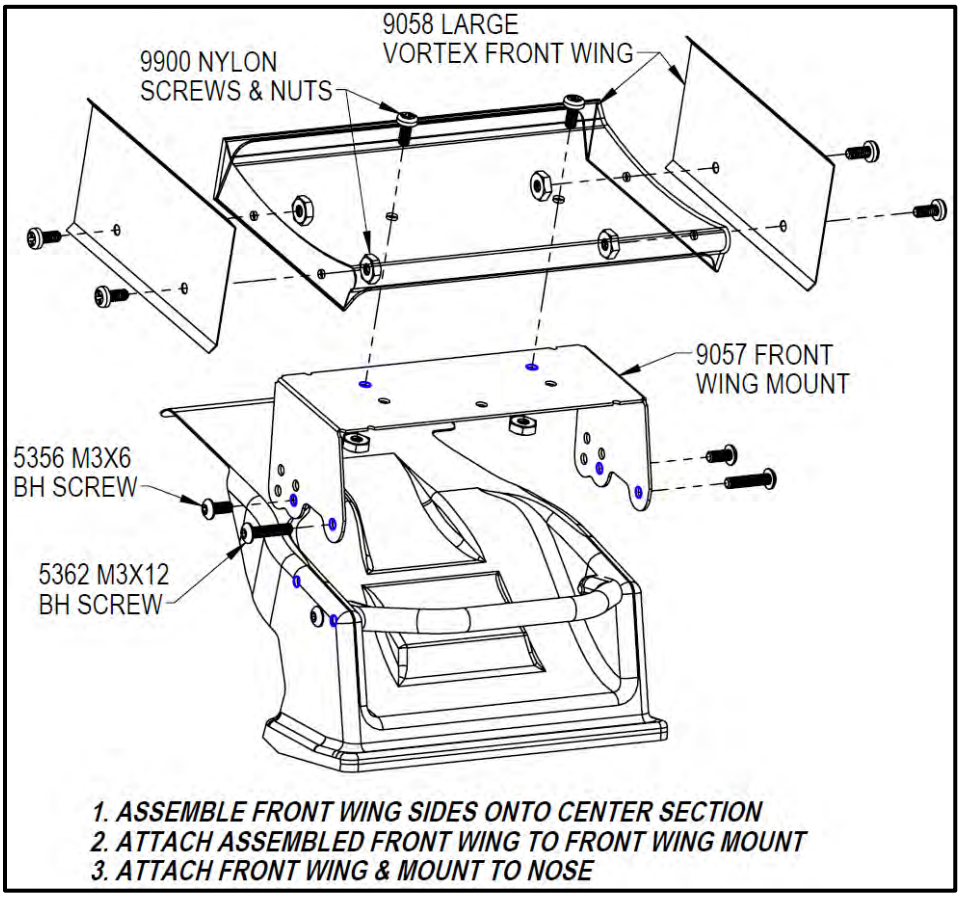

Completed Nose Installation

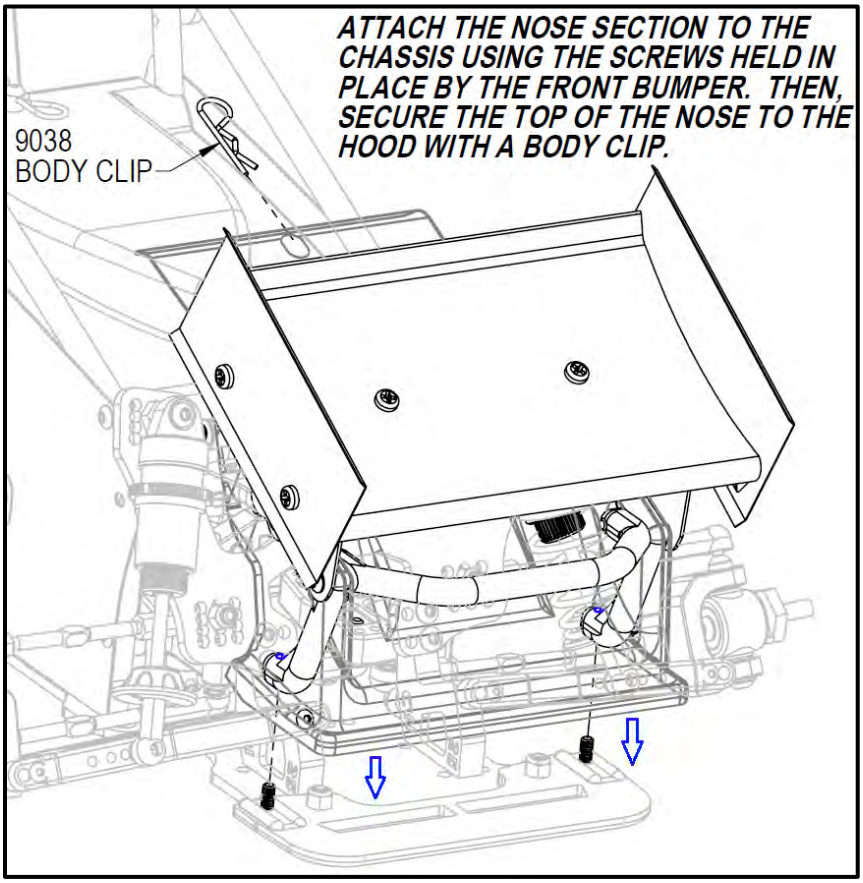

Cage & Body Panel Preparation

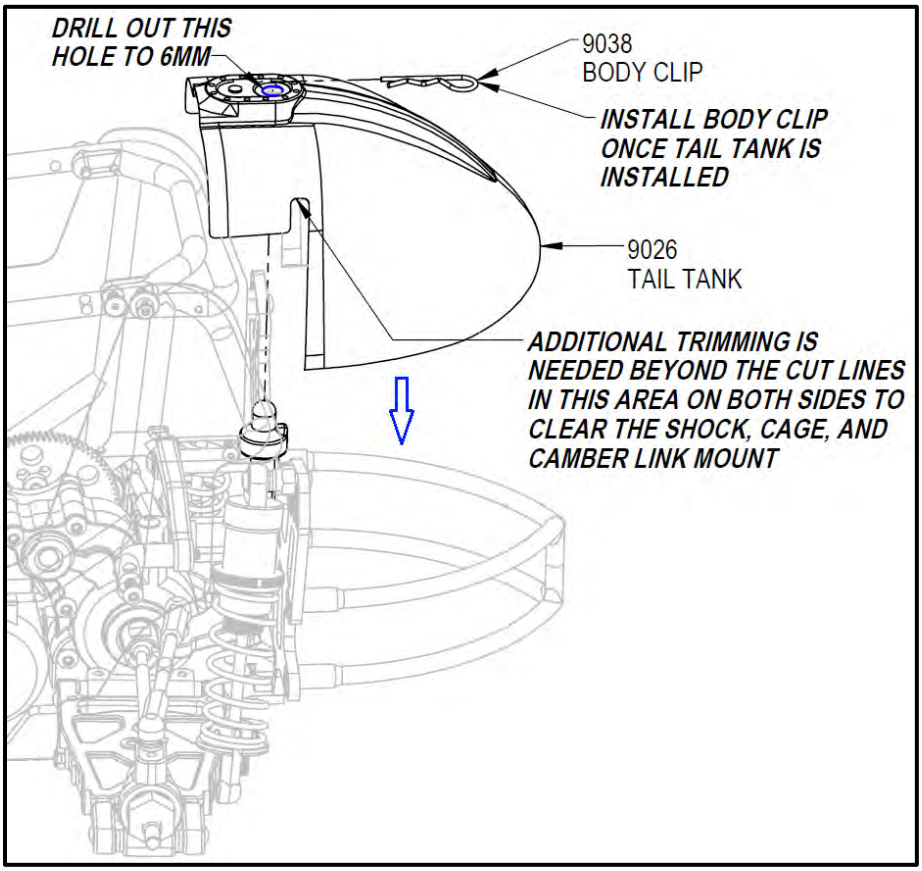

Top Wing Assembly

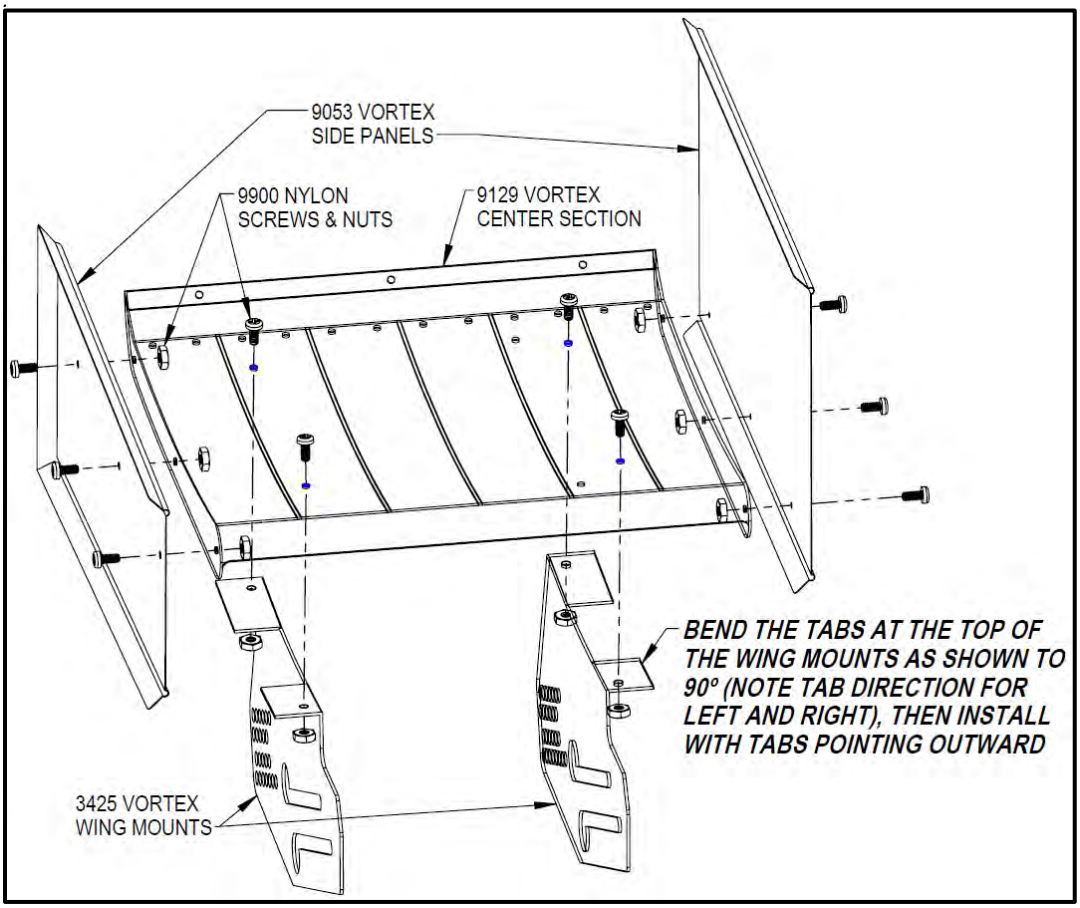

Main Wing Brace Installation

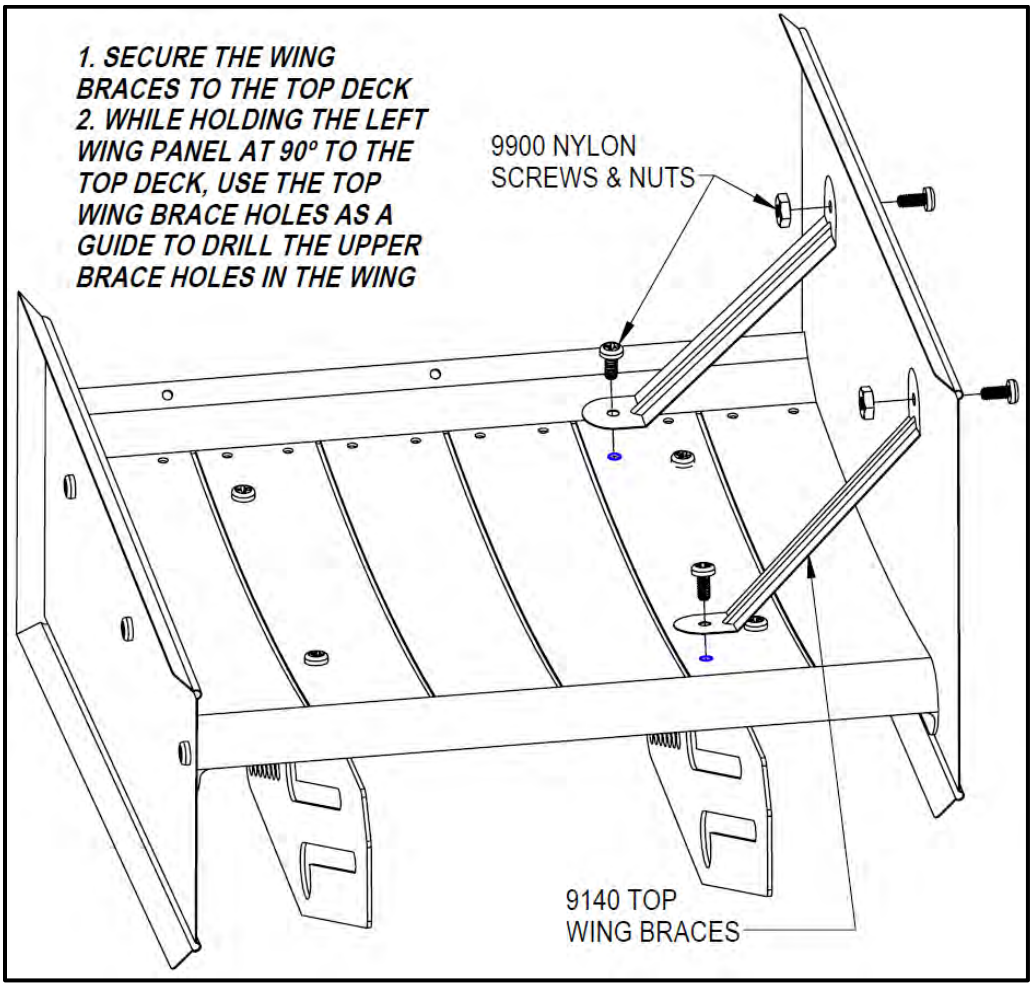

Lower Right Side Wing Brace Installation

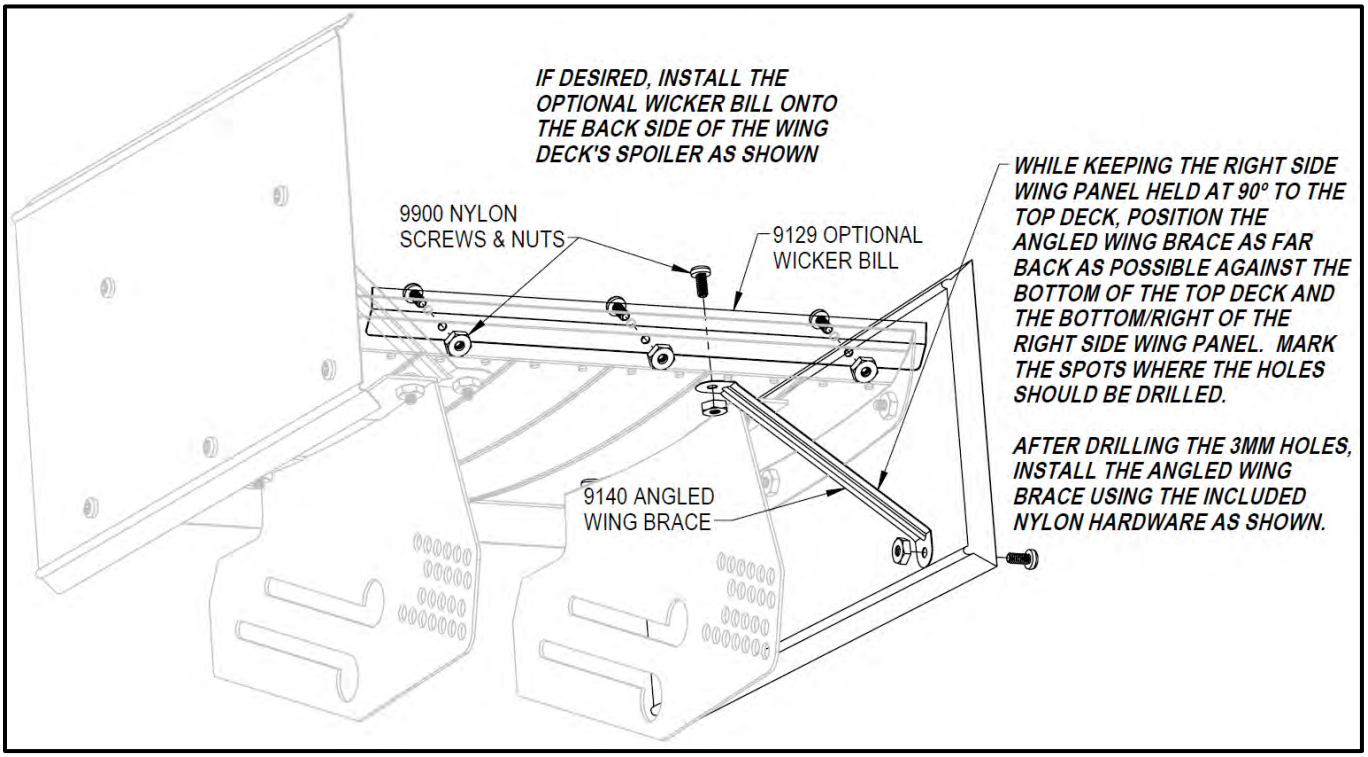

Top Wing Installation

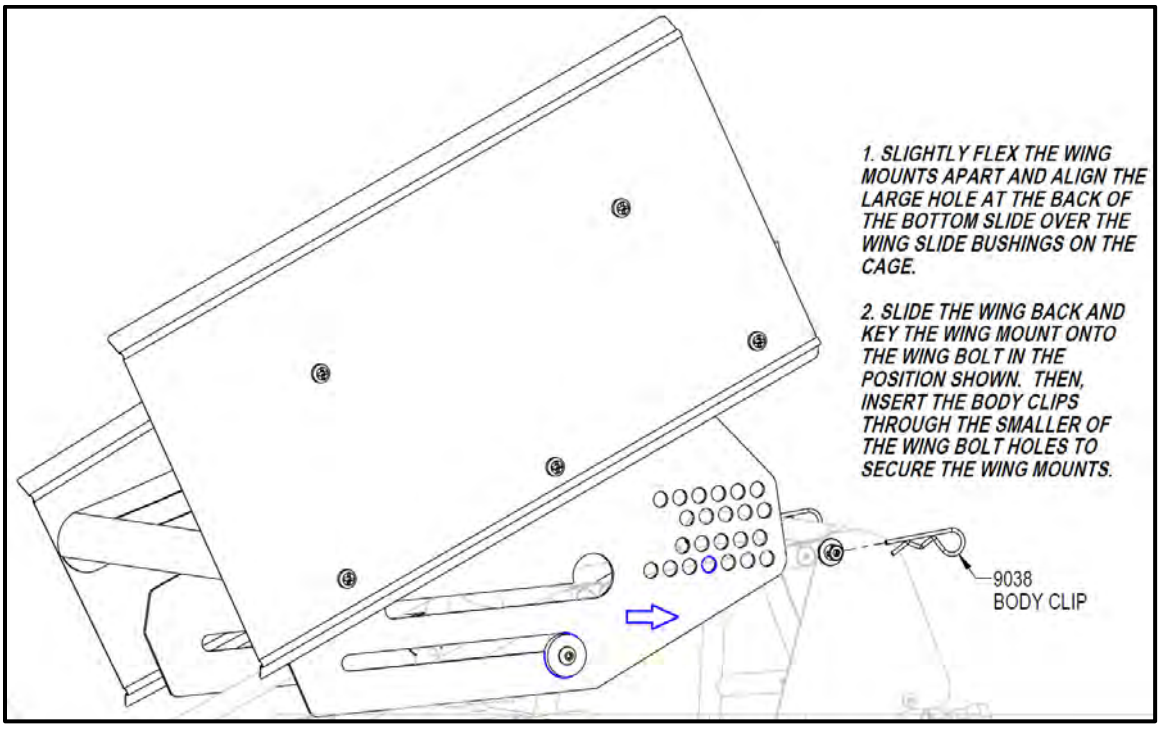

Wheel & Tire Installation

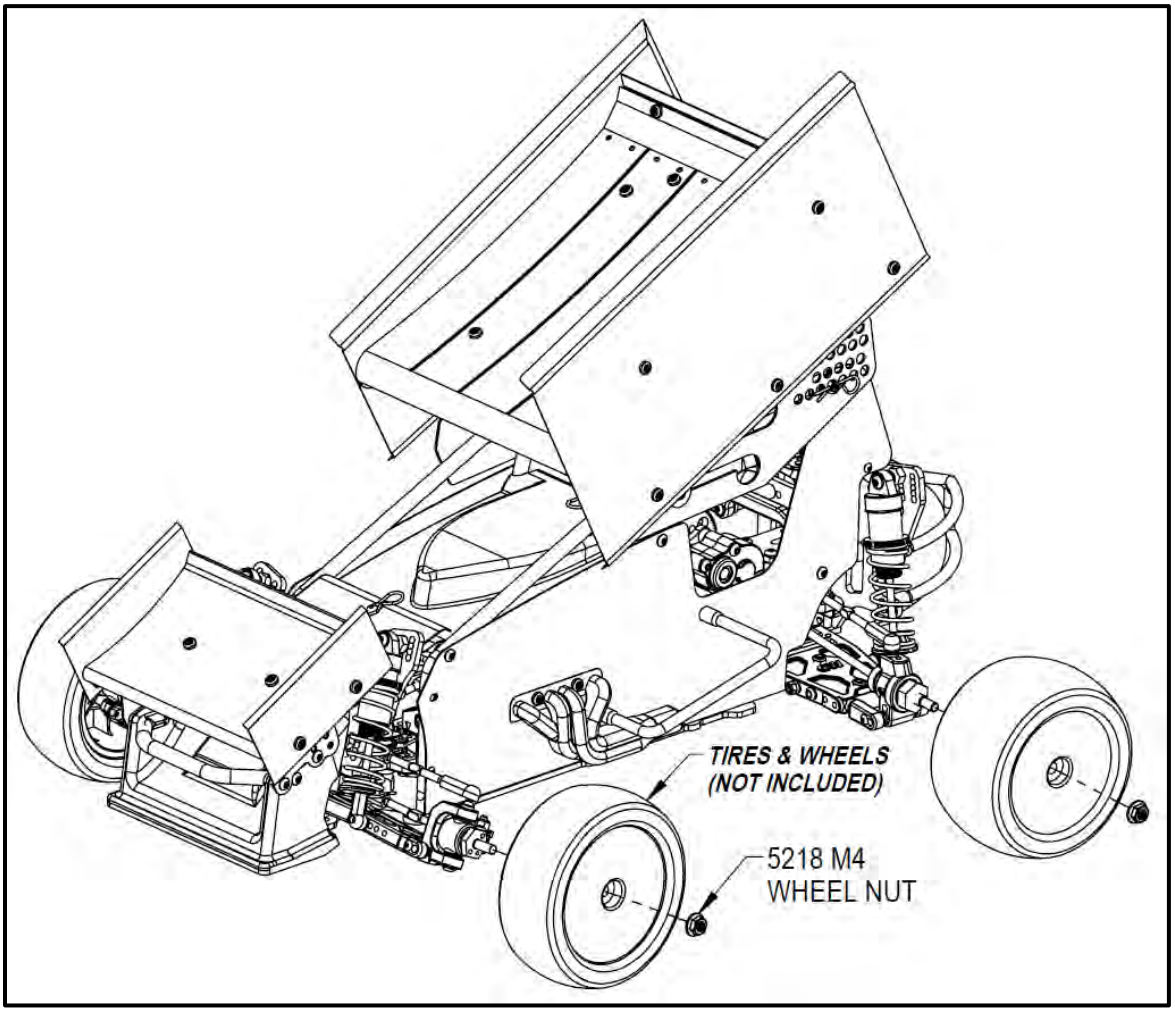

Congratulations! The assembly process is complete.

Basic set-up – use the included turnbuckle wrench to fine tune the steering and camber links. Begin with a slight amount of toe-out on the front wheels. Make sure the servo saver is centered when the wheels are centered. Adjust the camber links so that the tops of all 4 tires lean to the left slightly (1º).

Setup and Tuning

The standard build settings for the kit will provide a good starting point for an average "loose dirt" track. We've done our best to provide the racer with the best possible car, however it is the tuning of the car to the particular driver and track conditions that will make it a consistent winner. The following tuning tips can be used to dial the car into a specific track and situation. Each section is listed by order of importance.

1. Tires

Handling is the most important factor in dirt oval racing when it comes to lower lap times and winning races and at least 50% of handling is in the tires. Some racing tracks and organizations require a spec tire. Other tracks may allow any type of tire to be run. Regardless of the rules, it is important to choose the best option allowable for the track and conditions. Clean your tires with a mixture of Simple Green and water after running. For some tracks, breaking in the tires and/or adding a chemical prep can improve bite – the best advice is to ask another racer(s) who is fast at a track what works best. If tires are wearing out quickly, consider using a harder compound tire.

2. Shocks

If tires are 50% of handling, shocks are probably the next 30%. Now that you've done all the work to make a great set of tires, it's the shock's job to keep them on the track as much as possible. We've found the 6lb rear and 5lb front springs to be the best combination for this car. Stiffer or softer springs can be used to achieve different results. Too stiff or too soft can quickly move the car's set up out of the ballpark, so test accordingly and go back to the stock springs if you are struggling. Another important adjustment in the shocks is the damping which is controlled by the pistons and shock oil. The smaller the piston holes and the heavier the oil, the greater the damping. Damping requirements will vary from track to track depending on how bumpy the track is and the size and spacing of the bumps. If your car appears to be skidding as it enters a turn, you likely have too much damping and should change to a lighter oil or larger hole piston. If the tires appear to be oscillating and bouncing, the problem is likely not enough damping. Fix by using a smaller hole piston or heavier shock oil. Getting the damping right for a given track will require some trial and error but is critical in keeping the tires on the ground allowing the car to accelerate and turn effectively. Try to use shock tuning to get the car through the bumps smoothly before attempting to use it to tighten or loosen the car.

3. Battery Location & Offset

The Outlaw 5.1 is equipped to be run on loose dirt & hard packed tracks with low to medium grip. The battery can be moved forward and back using the option holes in the chassis. The entire chassis plate can be shifted left and right as well, by changing the offset via the option holes for the front and rear suspension mounts. This provides plenty of options of chassis set up & weight bias.

Weight Shifted Right – most aggressive position for low grip, will generate the most traction
Weight Shifted Left – most aggressive setup for high grip, will generate best corner speed if grip is very high

4. Ride Height and Car Weight

The ride height is the distance between the track and the bottom of the chassis. For most loose dirt tracks the normal ride height should be 20mm in the rear and 18mm in the front. A little more ride height in the rear is usually good because the rear of the car will squat under acceleration. Ride height is adjusted using the threaded collars on the springs. Ride height can be lowered for extremely smooth high bite tracks and can be raised if the chassis is bottoming out or more weight transfer is preferred.

Weight in the form of brass or lead can be added to the car to make the car easier to drive on all types of tracks. The added weight helps keep the tires pushed into the track. However adding weight will directly affect ride height by lowering the chassis, which is NOT what you want in this situation. So when adding weight, make sure you re-adjust the ride height.

5. Camber Links and Roll Centers

The hinge pin and camber link positions described in the kit instructions provide the standard roll center locations for this car. Both front and rear camber links can be shortened or lengthened by using optional holes included. Shortening the camber links will cause the car to react quicker at the expense of stability. Front and rear can be adjusted independently to achieve the proper chassis balance for a given track condition.
Lowering the inner camber link location will raise the roll center and cause the chassis to roll less in corners. Less roll is generally better for conditions where traction is very high. Also be aware that lowering and/or shortening the camber links will increase camber gain as the suspension compresses.

6. Cross-weight

Cross-weight which is sometimes referred to as “wedge” can help tighten or loosen the car. Since oval racing consists only of left turns, there is less need to keep the weight of the car equally balanced between the left and right side tires. Increasing the spring tension on the left rear and right front shocks will add weight to those corners and make the car tighter. Doing the opposite will make it looser. Be careful not to go too far, excessive cross-weight can upset the ride height and not allow the suspension to work properly. A set of scales is required to measure cross-weight and should be measured on a level surface with the car as “ready to race” as possible.

7. Rear steer

Rear steer is created with the use of the adjustable rear arms. Because the car spends a great amount of time turning left, it is more efficient to have the rear tires help with the steering. The amount of rear steer needed largely depends on the track. Tighter turns require more rear steer. The most common setting is 5º total in on the left rear and 2º total in on the right rear (this includes toe in the chassis, suspension mounts, and arms added together). To help the car turn more, try 6 degrees in on the left and 1 degree out on the right. To make the car drive straighter try 3 degrees in on the left rear and 3 degrees in on the right rear. This is also a very easy adjustment to make before a race to quickly adapt to a changing track surface.

8. Spoiler adjustment

Adjusting the spoiler angle on a late model body or adding a vertical wicker bill to the top of the spoiler can have a dramatic effect on how the car drives. More angle or adding a wicker bill will plant the rear of the car and help keep it from spinning out. Less angle usually works better on high grip tracks where aerodynamic downforce is less needed. Experiment to determine how much angle feels good at a particular track.

9. Droop

Droop is the distance the tires can drop before they lose contact with the track when the chassis is lifted. Droop can be limited by the use the different shock mounting holes or with spacers inside the shocks. Limiting the droop in the front suspension will give the car more steering and limiting rear droop can provide more rear side bite. However a car with little or no droop will not handle the bumps in the track as well and can cause the car to be erratic. More droop works better on a low grip track and less droop works better on a high grip track.

10. Other adjustments

The adjustments above account for most of the changes needed to dial the car into a given track. Other adjustments are included in the car such as camber, Ackermann, wheelbase, front track, shock angle, etc. Even more optional parts are available such as sway bars, caster blocks and front suspension mounts.
Please visit the Tech Center page at www.customworksrc.com for the full setup glossary and explanation of these options. Also, you will find a PDF copy of this manual as well as blank set-up sheets and proven racer’s set-ups.

Preventive Maintenance

RC cars have many moving parts which will wear over time. The normal wear of these parts as well as dirt from the track and occasional crashes require you to keep your car well maintained for optimal performance. Weekly maintenance should include:

- Remove and clean wheels and tires. Check wear and glue joints.
- Check for “gritty” ball bearings. Clean and re-lube or replace as needed.
- Remove shocks from the car, remove springs from the shocks and check for normal movement.
- With the tires and shocks removed, check the suspension movement and make sure it moves freely but without too much slop. Even a small amount of binding caused by a bent pin, dirt, etc. can cause erratic handling.
- Remove CVAs and check for excess slop or wear. Clean and re-lube.
- If differential is not smooth, sand or replace rings and rebuild. Make sure differential is not slipping on the track.
- Check for loose screws.
- Check for any bent or broken parts.

Offset & Wheelbase Adjustment Guide

The Outlaw 5.1's chassis has three different front offsets, two rear offsets, and two different wheelbase options built in. These are very useful tuning aids in oval racing and are easy ways to make a big change in setup to keep up with ever-changing track conditions and grip levels.

The manual has walked you through building the vehicle with the lower offset, shorter wheelbase, and front end in line with the rear; which is a good starting point. If the grip level you're racing on is higher and you can stand to dial out some traction due to your car traction rolling or it drives too aggressively, opting for the higher offset option and/or longer wheelbase will probably be the best choice.

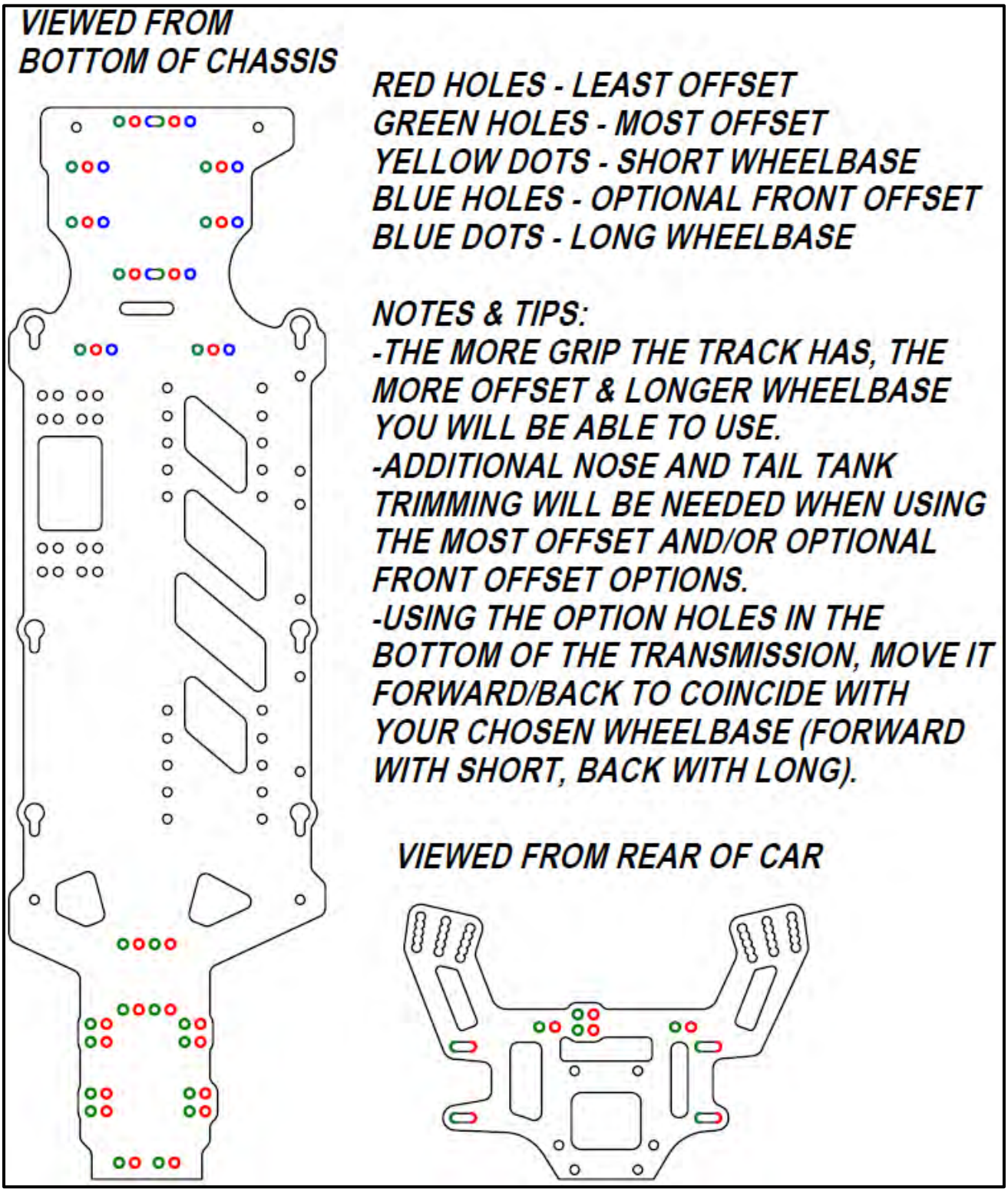

OUTLAW 5-1 SPRINT CAR

Driver:_____ Class:_____ ❑Flat ❑Banked Run Line:_____

Track:_____ Driving Style: Smooth ❑ Surface: Smooth ❑❑❑❑❑ Bumpy

Event:_____ Aggressive ❑ Traction: High ❑❑❑❑❑❑❑ Low

Tires

	Brand/Name	Compound	Insert
RF			
LF			
RR			
LR			

Cleaned With:

Traction Additive:

Notes:

Shocks - ❑Small Bore ❑12mm Big Bore ❑Bladder ❑Emulsion

	Body Length	Shaft Length	Spring	Oil	Piston	Shock Length	Collar	Spring Cup
RF	S M L	S M L						Std. ___
LF	S M L	S M L						Std. ___
RR	S M L	S M L						Std. ___
LR	S M L	S M L						Std. ___

Measure the length of the exposed shaft with the shock fully extended.
Go to lighter oil or larger piston if tires are skidding over bumps in track.
Go to heavier oil or smaller piston if tires or car is bouncing.

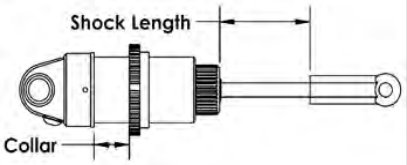

Ride Height

LF		RF	
LR		RR	

Offset

Front	❑Low ❑Med ❑High
Rear	❑Med ❑High

Corner Weights

LF		RF	
LR		RR	

Rear %	
Left %	
Wedge %	

Notes:_____ Total Weight:_____ ❑Measured without wing

Front Suspension

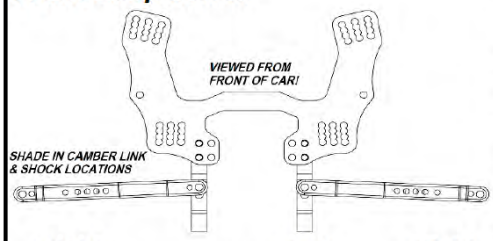

Kick-Up	❑15° ❑30° ❑20° ❑35° ❑25° ❑__°
Toe	❑ In ___° ❑ Out ___°
Sway Bar	❑ None ❑ _____
Servo Position	❑ Front ❑ Bellcranks

Right		Left		Right		Left
____° ❑0 ❑-5 ❑+5 ❑-10 ❑+10	Camber	____° ❑0 ❑-5 ❑+5 ❑-10 ❑+10	Hex Width	___mm		___mm
❑ Inline ❑ Trailing ❑ Inclined	Caster	❑ Inline ❑ Trailing ❑ Inclined	Outer Link Location	❑ Inner ❑ Kingpin		❑ Inner ❑ Kingpin
❑ Forward ❑ Middle ❑ Back	Spindle	❑ Forward ❑ Middle ❑ Back	Outer Ball Stud Washers	❑ None ❑ ___mm		❑ None ❑ ___mm
Inner __mm Outer __mm	Spindle Ball Stud	Inner __mm Outer __mm	Caster Block Spacing	❑ Forward ❑ Middle ❑ Back		❑ Forward ❑ Middle ❑ Back
❑ Inside ❑ Middle ❑ Outside	Bump Steer Washers	❑ Inside ❑ Middle ❑ Outside	Inner Hinge Pin Height	❑ High ❑ Low		❑ High ❑ Low
	Bellcrank Ball Stud		Kick-Up Material	❑ Aluminum ❑ Brass		❑ Aluminum ❑ Brass

Rear Suspension



Gear Diff Oil-_____



			Outdrives / Differential	❑ Steel ❑ Alum ❑ Gear	
			Slipper	❑ Yes ❑ No	
Left		Right		Left	Right
____° ❑0 ❑1 ❑3 ❑2 ❑4	Camber	____° ❑0 ❑1 ❑3 ❑2 ❑4		Inner ___ Outer ___	Inner ___ Outer ___
❑ None ❑ __mm	Spacers Behind Hub	❑ None ❑ __mm	Ball Stud Washers		
❑ V1 ❑ V2 ❑ __° ❑ Brass	Suspension Mount Shims	❑ V1 ❑ V2 ❑ __° ❑ Brass	Outer Link Location	❑ Inner ❑ Outer	❑ Inner ❑ Outer
❑ Brass ❑ Delrin ❑ Plastic	Suspension Mount	❑ Brass ❑ Delrin ❑ Plastic	Anti-Squat Shims	❑ None ❑ __mm	❑ None ❑ __mm
❑ High ❑ Middle ❑ Low	Rear Hub	❑ High ❑ Middle ❑ Low	Lower Shock Position	❑ Inner ❑ Outer	❑ Inner ❑ Outer
❑ Forward ❑ Middle ❑ Back	Outer Hinge Pin Height	❑ Forward ❑ Middle ❑ Back	Suspension Mount	❑ Forward ❑ Back	❑ Forward ❑ Back
	Rear Arm Spacing		Transmission Position & Type	❑ Forward ❑ Back	❑ Stand-Up ❑ Laydown
			Hex Width	___mm	___mm
			Arm Toe	❑In ❑Out ___°	❑In ❑Out ___°

Top Wing:

❑ 7x7 Flat ❑ 7x7 Vortex

Wicker Bill: ❑ Yes ❑ None

Front Wing:

❑ Flat ❑ Vortex ❑ None

❑ Small ❑ Large

Top Wing Location:

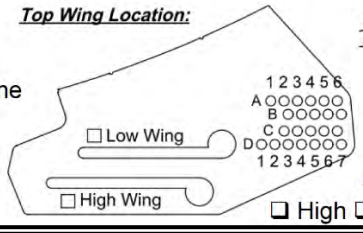

Wing Bolt Location



Front Button: ❑ High ❑ Middle ❑ Low

Electronics

Motor:_____ Speed Control:_____

Amp Draw:_____ Timing/Boost:_____

Timing:_____ Drag Brake:_____

Pinion:_____ Battery:_____

Spur:_____ Battery Position: F❑❑❑❑❑R

Notes: