CUSTOM WORKS ENFORCER GBX 3

DRIVER: Rob "Wolfman" Mulvaney
DATE: 8-18-2012
EVENT: Michigan State Dirt Oval Championships
CLASS: Mod Sprint
TRACK: Dukes Proscale LENGTH: 220

☐Clay ☑Hard Packed ☐Loose Dirt
☐Carpet ☐Asphalt ☐Concrete
☑Flat ☐Banked ☐True Oval ☐Tri-Oval
Traction: ☐High ☑Medium ☐Low

FRONT SUSPENSION

RIGHT

CAMBER: -.5
CAMBER LINK LOCATION: ☑OUTER ☐INNER
CAMBER RATE SHIMS: 0
KINGPIN INCLINE: ☐0° ☑ANGLED
ACKERMANN: ☐ON SPINDLE ☑SHORT ☐MIDDLE ☐LONG
FRONT AXLE: ☑STOCK ☐EXTENDED
CASTOR: ☐0° ☐+5° ☐-5° ☑+10° ☐-10°
AXLE SHIMS: _____

TOE IN/OUT AMOUNT: -1/16
RF ☐LEAD ☐TRAIL AMOUNT: _____
SHOCK POSITION: ☑TOP ☐MID ☐BOT

SUSPENSION POSITION
RF: ☐OUTER ☑MIDDLE ☐INNER
LF: ☐OUTER ☐MIDDLE ☑INNER

KICK-UP: ☐25° ☐20° HIGH ☐20° LO ☑15° HIGH ☐15° LO
SWAY BAR: ☐NONE ☐.063" ☑.078"

LEFT

CAMBER: +.5
CAMBER LINK LOCATION: ☐OUTER ☐INNER
CAMBER RATE SHIMS: 0
KINGPIN INCLINE: ☐0° ☑ANGLED
ACKERMANN: ☐ON SPINDLE ☐SHORT ☐MIDDLE ☑LONG
CASTOR: ☐0° ☐+5° ☐-5° ☑+10° ☐-10°
FRONT AXLE: ☐STOCK ☐EXTENDED
AXLE SHIMS: _____

SHOCKS

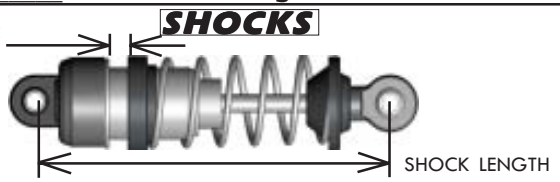

LEFT FRONT SHOCK
BODY LENGTH: ☐SHORT ☐MED ☐LONG
SHAFT LENGTH: ☐SHORT ☐MED ☐LONG
SPRING: gray
OIL: 50 PISTON: large
BLADDER: black
LENGTH: 2.552
COLLAR: .180

RIGHT FRONT SHOCK
BODY LENGTH: ☐SHORT ☐MED ☐LONG
SHAFT LENGTH: ☐SHORT ☐MED ☐LONG
SPRING: Black
OIL: 50 PISTON: large
BLADDER: black
LENGTH: 2.552
COLLAR: .172

LEFT REAR SHOCK
BODY LENGTH: ☐SHORT ☐MED ☐LONG
SHAFT LENGTH: ☐SHORT ☐MED ☐LONG
SPRING: gray
OIL: 40 PISTON: large
BLADDER: black
LENGTH: 2.713
COLLAR: .313

RIGHT REAR SHOCK
BODY LENGTH: ☐SHORT ☐MED ☐LONG
SHAFT LENGTH: ☐SHORT ☐MED ☐LONG
SPRING: gray
OIL: 40 PISTON: large
BLADDER: black
LENGTH: 2.713
COLLAR: .248

REAR SUSPENSION

LEFT

CAMBER LINK LOCATION: ☐OUTER ☐INNER

-MARK ON DIAGRAM CAMBER LINK LOCATION, SHOCK POSITION & HEIGHT

RIGHT

CAMBER LINK LOCATION: ☐INNER ☐OUTER

HUB SPACING: SHADE IN 4 SPACERS
F☐☐☐☐☐☐☐R
CAMBER: +1
TOE-IN: 6
WHEEL SPACERS: _____

SWAY BAR: ☐NONE ☐.063" ☐.078"
REAR WIDTH (INNER/OUTER)
LR: inner RR: middle
TOE-BLOCK SHIMS:
LR: .060 RR: .060
ANTI-SQUAT SHIMS:
LR: _____ RR: _____

HUB SPACING: SHADE IN 4 SPACERS
F☐☐☐☐☐☐☐R
CAMBER: -1
TOE-IN: 4
WHEEL SPACERS: .125

-SHADE IN MOUNTING LOCATIONS ON SUSPENSION ARMS, BEARING CARRIER AND SHOCK TOWER.

WEIGHT & CHASSIS HEIGHTS

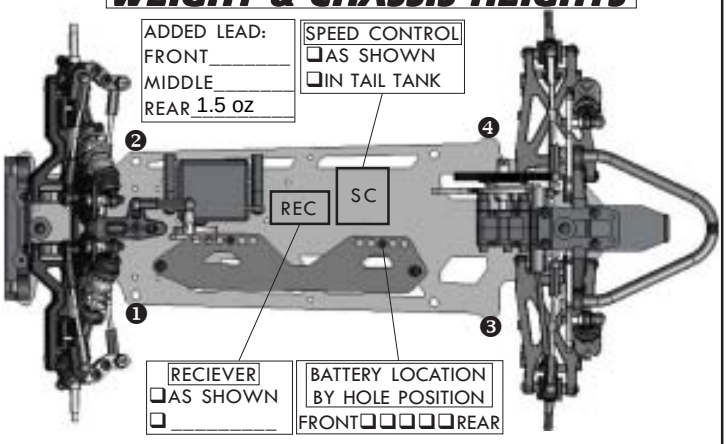

CORNER WEIGHTS:
LF: _____ RF: _____
LR: _____ RR: _____

OVERALL WEIGHT: _____

CHASSIS HEIGHTS BY LOCATION:
❶ .538 ❷ .535
❸ .517 ❹ .535
MEASURED FROM:
☐TOP OF CHASSIS
☐BOTTOM OF CHASSIS

TIRES & TRACTION

TIRE TYPE: ☑FOAM ☐STREET RUBBER ☐LOOSE DIRT

	COMPOUND	DIAMETER	INSERT
RF:	Custom works silver	2.75	
LF:	Custom works silver	2.75	
RR:	Custom works silver	2.75	
LR:	Custom works silver	2.75	

TRACTION ADDITIVE: DR Witt and Paragon

-SHADE IN AREAS OF TRACTION ADDITIVE AND DRAW IN TIRE GROOVES

5 lines — LF
5 lines — RF
7 lines 1/4 " forward drive — LR
7 lines 1/4 " forward drive — RR

WING

MAIN WING SIZE: ☐6X6 ☑7X7
FRONT WING SIZE: small
SPOILER LENGTH: _____
WING LOCATION: _____

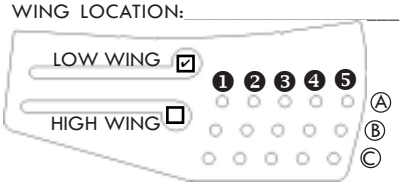

HOOD TYPE: Eagle

MISC...

MOTOR: 8.5
PINION: 27 SPUR: 81
SPEED CONTROL: orion
PUNCH SETTING: _____
INTIAL BRAKE: _____
AUTO BRAKE: _____

No tire wear